SECTION GI
GENERAL INFORMATION

CONTENTS

HOW TO USE THIS MANUAL 3

HOW TO USE THIS MANUAL 3
Description 3
Terms 3
Units 3
Contents 3
Relation between Illustrations and Descriptions 4
Components 4

HOW TO FOLLOW TROUBLE DIAGNOSES..... 6
Description 6
How to Follow Test Groups in Trouble Diagnosis.....6
Key to Symbols Signifying Measurements or Procedures 7

HOW TO READ WIRING DIAGRAMS 9
Connector Symbols 9
Sample/Wiring Diagram -Example- 10
Description 11

ABBREVIATIONS 13
Abbreviation List 13

TIGHTENING TORQUE OF STANDARD BOLTS 14
Description 14
Tightening Torque Table (New Standard Included) 14

TERMINOLOGY 17
SAE J1930 Terminology List 17

FEATURES OF NEW MODEL 21

IDENTIFICATION INFORMATION 21
Model Variation 21
Information About Identification or Model Code 21
Dimensions 23
Wheels & Tires 23

PRECAUTION 24

PRECAUTIONS 24
Description 24
Precaution for Supplemental Restraint System (SRS) "AIR BAG" and "SEAT BELT PRE-TENSIONER" 24
Precautions For Xenon Headlamp Service 24
Precaution Necessary for Steering Wheel Rotation after Battery Disconnect 24
Precaution for Procedure without Cowl Top Cover...25
General Precautions 25
Three Way Catalyst 27
Multiport Fuel Injection System or Engine Control System 27
Hoses 27
Engine Oils 28
Air Conditioning 28
Fuel 29

LIFTING POINT 30
Commercial Service Tools 30
Garage Jack and Safety Stand and 2-Pole Lift 30
Board-On Lift 31

TOW TRUCK TOWING 32
Tow Truck Towing 32
Vehicle Recovery (Freeing a Stuck Vehicle) 32

BASIC INSPECTION 34

SERVICE INFORMATION FOR ELECTRICAL INCIDENT 34
Work Flow 34
Control Units and Electrical Parts 34
Intermittent Incident 35
Circuit Inspection 37

CONSULT-III/GST CHECKING SYSTEM 43
Description 43
CONSULT-III Function and System Application*1...43
CONSULT-III/GST Data Link Connector (DLC) Circuit 43

Wiring Diagram - CONSULT-III/GST CHECKING SYSTEM - 45

INSPECTION AND ADJUSTMENT 48

ADDITIONAL SERVICE WHEN REMOVING BATTERY NEGATIVE TERMINAL 48

ADDITIONAL SERVICE WHEN REMOVING BATTERY NEGATIVE TERMINAL : Required Procedure After Battery Disconnection 48

HOW TO USE THIS MANUAL

HOW TO USE THIS MANUAL

Description

INFOID:0000000003852757

This volume explains “Removal, Disassembly, Installation, Inspection and Adjustment” and “Trouble Diagnoses”.

Terms

INFOID:0000000003852758

- The captions **WARNING** and **CAUTION** warn you of steps that must be followed to prevent personal injury and/or damage to some part of the vehicle.
  WARNING indicates the possibility of personal injury if instructions are not followed.
  CAUTION indicates the possibility of component damage if instructions are not followed.
  BOLD TYPED STATEMENTS except **WARNING** and **CAUTION** give you helpful information.
  Standard value: Tolerance at inspection and adjustment.
  Limit value: The maximum or minimum limit value that should not be exceeded at inspection and adjustment.

Units

INFOID:0000000003852759

- The **UNITS** given in this manual are primarily expressed as the SI UNIT (International System of Unit), and alternatively expressed in the metric system and in the yard/pound system.
  Also with regard to tightening torque of bolts and nuts, there are descriptions both about range and about the standard tightening torque.

  “Example”
  Range

  Outer Socket Lock Nut : 59 - 78 N·m (6.0 - 8.0 kg-m, 43 - 58 ft-lb)

  Standard

  Drive Shaft Installation Bolt : 44.3 N·m (4.5 kg-m, 33 ft-lb)

Contents

INFOID:0000000003852760

- **A QUICK REFERENCE INDEX**, a black tab (e.g. BR) is provided on the first page. You can quickly find the first page of each section by matching it to the section's black tab.
- **THE CONTENTS** are listed on the first page of each section.
- **THE TITLE** is indicated on the upper portion of each page and shows the part or system.
- **THE PAGE NUMBER** of each section consists of two or three letters which designate the particular section and a number (e.g. “BR-5”).
- **THE SMALL ILLUSTRATIONS** show the important steps such as inspection, use of special tools, knacks of work and hidden or tricky steps which are not shown in the previous large illustrations.
  Assembly, inspection and adjustment procedures for the complicated units such as the automatic transaxle or transmission, etc. are presented in a step-by-step format where necessary.

Relation between Illustrations and Descriptions

INFOID:0000000003852761

The following sample explains the relationship between the part description in an illustration, the part name in the text and the service procedures.

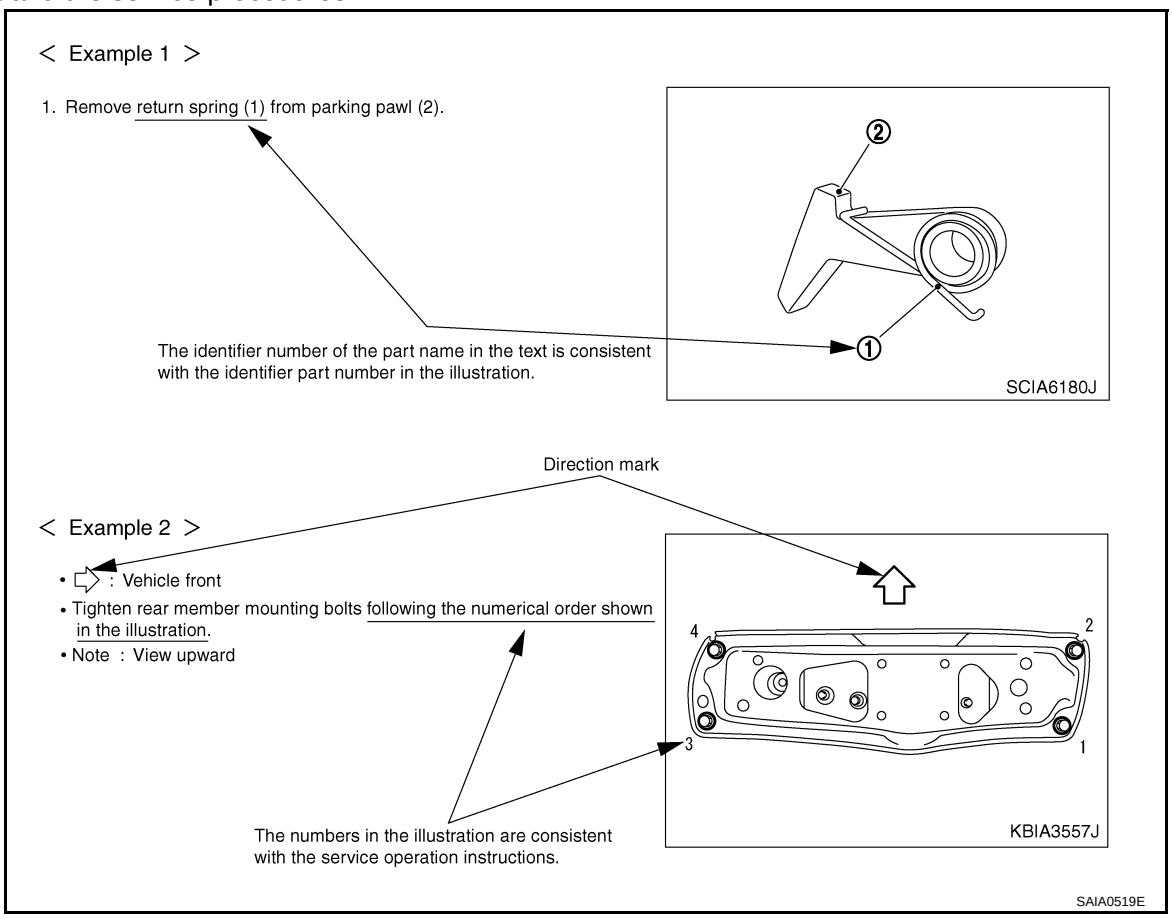

Components

INFOID:0000000003852762

- **THE LARGE ILLUSTRATIONS** are exploded views (see the following) and contain tightening torques, lubrication points, section number of the **PARTS CATALOG** (e.g. SEC. 440) and other information necessary to perform repairs.
  The illustrations should be used in reference to service matters only. When ordering parts, refer to the appropriate **PARTS CATALOG**.
  Components shown in an illustration may be identified by a circled number. When this style of illustration is used, the text description of the components will follow the illustration.

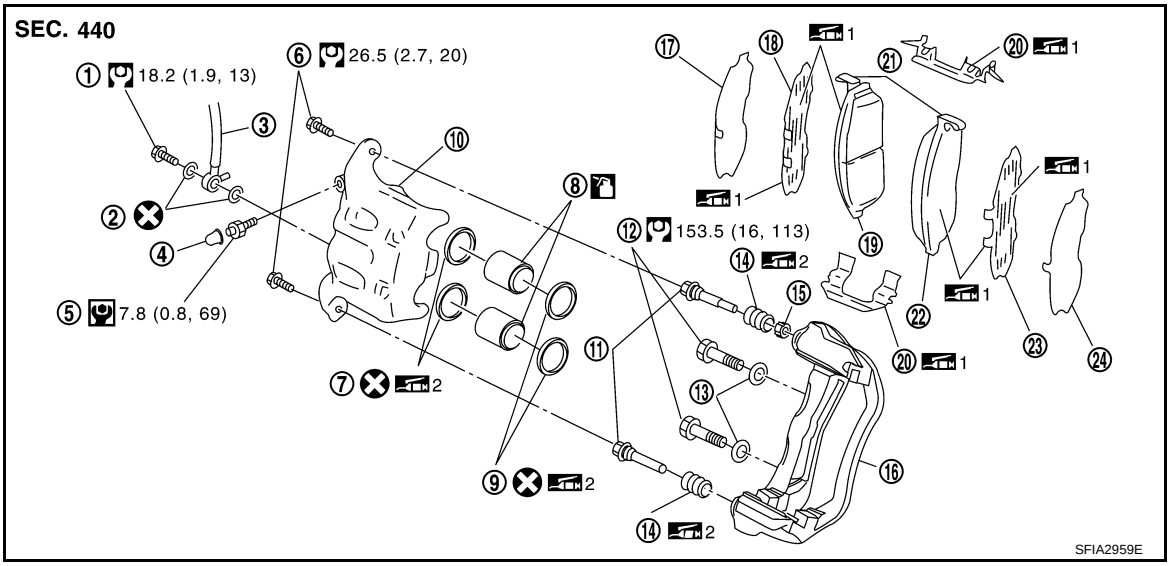

1. Union bolt	2. Copper washer	3. Brake hose
4. Cap	5. Bleed valve	6. Sliding pin bolt
7. Piston seal	8. Piston	9. Piston boot
10. Cylinder body	11. Sliding pin	12. Torque member mounting bolt
13. Washer	14. Sliding pin boot	15. Bushing
16. Torque member	17. Inner shim cover	18. Inner shim
19. Inner pad	20. Pad retainer	21. Pad wear sensor
22. Outer pad	23. Outer shim	24. Outer shim cover
1: PBC (Poly Butyl Cuprysil) grease or silicone-based grease	2: Rubber grease	: Brake fluid

Refer to GI section for additional symbol definitions.

SYMBOLS

SYMBOL	DESCRIPTION		SYMBOL	DESCRIPTION
	Tightening torque The tightening torque specifications of bolts and nuts may be presented as either a range or a standard tightening torque.	: N•m (kg-m, ft-lb)		Always replace after every disassembly.
		: N•m (kg-m, in-lb)	Ⓟ	Apply petroleum jelly.
	Should be lubricated with grease. Unless otherwise indicated, use recommended multi-purpose grease.		Ⓜ	Apply molybdenum added petroleum jelly.
	Should be lubricated with oil.		ATF	Apply ATF.
	Sealing point		★	Select with proper thickness.
Ⓛ	Sealing point with locking sealant.		☆	Adjustment is required.
	Checking point			

SAIA0749E

HOW TO FOLLOW TROUBLE DIAGNOSES

Description

INFOID:0000000003852763

NOTICE:
Trouble diagnoses indicate work procedures required to diagnose problems effectively. Observe the following instructions before diagnosing.

- Before performing trouble diagnoses, read the “Work Flow” in each section.
- After repairs, re-check that the problem has been completely eliminated.
- Refer to Component Parts and Harness Connector Location for the Systems described in each section for identification/location of components and harness connectors.
- When checking circuit continuity, ignition switch should be OFF.
- Refer to the Circuit Diagram for quick pinpoint check.
  If you need to check circuit continuity between harness connectors in more detail, such as when a sub-harness is used, refer to Wiring Diagram in each individual section and Harness Layout in PG section for identification of harness connectors.
- Before checking voltage at connectors, check battery voltage.
- After accomplishing the Diagnosis Procedures and Electrical Components Inspection, make sure that all harness connectors are reconnected as they were.

How to Follow Test Groups in Trouble Diagnosis

INFOID:0000000003852764

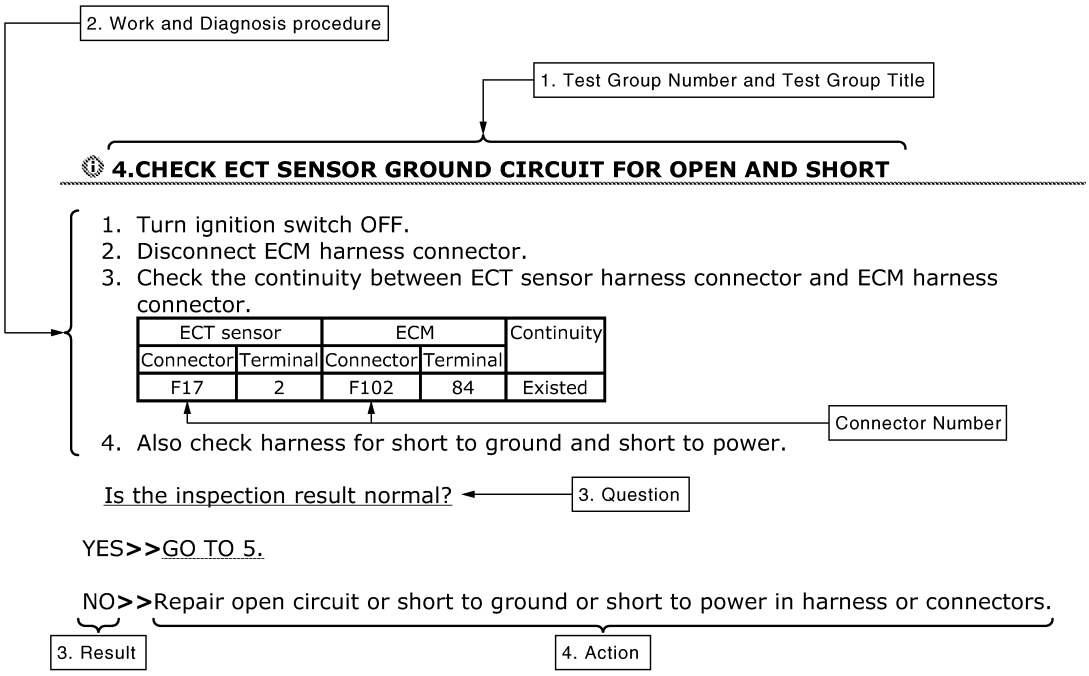

JPAIA0021GB

1. Test group number and test group title
   - Test group number and test group title are shown in the upper portion of each test group.
2. Work and diagnosis procedure
   - Start to diagnose a problem using procedures indicated in enclosed test groups.
3. Questions and results
   - Questions and required results are indicated in test group.
4. Action
   - Next action for each test group is indicated based on result of each question.

Key to Symbols Signifying Measurements or Procedures

INFOID:0000000003852765

SYMBOL	DESCRIPTION	SYMBOL	DESCRIPTION
	Check after disconnecting the connector to be measured.	GST	Procedure with Generic Scan Tool. (GST, OBD-II scan tool)
	Check after connecting the connector to be measured.	NO TOOLS	Procedure without CONSULT-II, CONSULT-III or GST
	Insert key into ignition switch.	A/C OFF	A/C switch is "OFF".
	Remove key from ignition switch.	A/C ON	A/C switch is "ON".
	Insert and remove key repeatedly.		REC switch is "ON".
OFF	Turn ignition switch to "OFF" position.		REC switch is "OFF".
ACC	Turn ignition switch to "ACC" position.		Fan switch is "ON". (At any position except for "OFF" position)
ON	Turn ignition switch to "ON" position.		Fan switch is "OFF".
ST	Turn ignition switch to "START" position.	FUSE	Apply fuse.
OFF → ACC	Turn ignition switch from "OFF" to "ACC" position.	FUSE BAT	Apply positive voltage from battery with fuse directly to components.
ACC → ON	Turn ignition switch from "ACC" to "ON" position.		
ACC → OFF	Turn ignition switch from "ACC" to "OFF" position.		

SAIA1539E

SYMBOL	DESCRIPTION	SYMBOL	DESCRIPTION
OFF ON	Turn ignition switch from "OFF" to "ON" position.		Drive vehicle.
ON OFF	Turn ignition switch from "ON" to "OFF" position.		
	Do not start engine, or check with engine stopped.	BAT	Disconnect battery negative cable.
	Start engine, or check with engine running.		Depress brake pedal.
	Apply parking brake.		Release brake pedal.
	Release parking brake.		Depress accelerator pedal.
C H	Check after engine is warmed up sufficiently.		Release accelerator pedal.
V	Votage should be measured with a voltmeter.	H.S. 8 V	Pin terminal check for SMJ type ECM or TCM connectors. **For details regarding the terminal arrangement, refer to the "ELECTRICAL UNITS" electrical reference page at the end of the manual.**
Ω	Circuit resistance should be measured with an ohmmeter.		
A	Current should be measured with an ammeter.		
	Pulse signal should be checked with an oscilloscope.		
	Procedure with CONSULT-III		
	Procedure without CONSULT-III		
P	Place selector lever in "P" position.		
N	Place selector lever in "N" position.		
	Jack up front portion.		
	Jack up rear portion.		
	Inspect under engine room.		
	Inspect under floor.		
	Inspect rear under floor.		

SAIA1540E

HOW TO READ WIRING DIAGRAMS

Connector Symbols

INFOID:0000000003852766

Most of connector symbols in wiring diagrams are shown from the terminal side.

- Connector symbols shown from the terminal side are enclosed by a single line and followed by the direction mark.
- Connector symbols shown from the harness side are enclosed by a double line and followed by the direction mark.
- Certain systems and components, especially those related to OBD, may use a new style slide-locking type harness connector. For description and how to disconnect, refer to PG section, “Description”, “HARNESS CONNECTOR”.

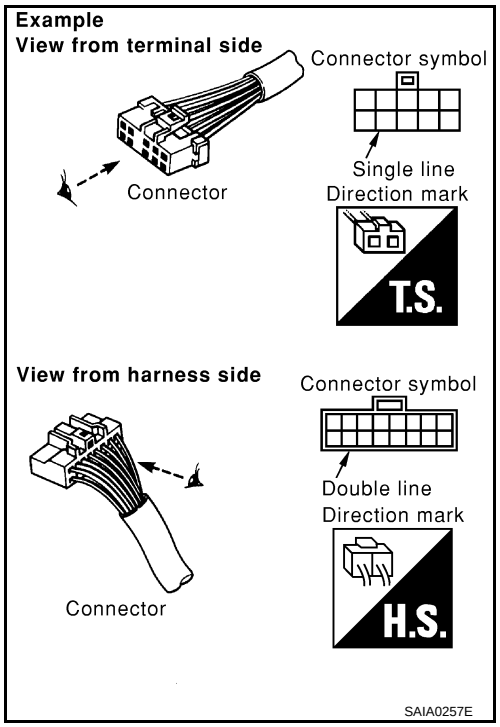

- Male and female terminals
  Connector guides for male terminals are shown in black and female terminals in white in wiring diagrams.

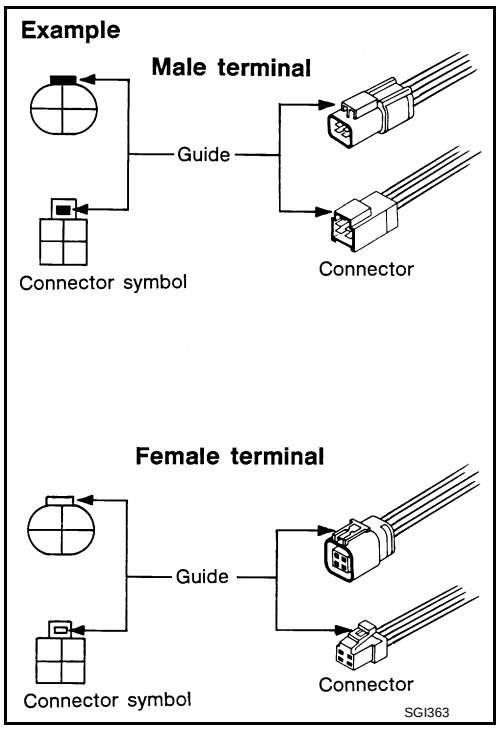

Sample/Wiring Diagram -Example-

INFOID:0000000003852767

- For detail, refer to following GI-11, "Description".

EXAMPL

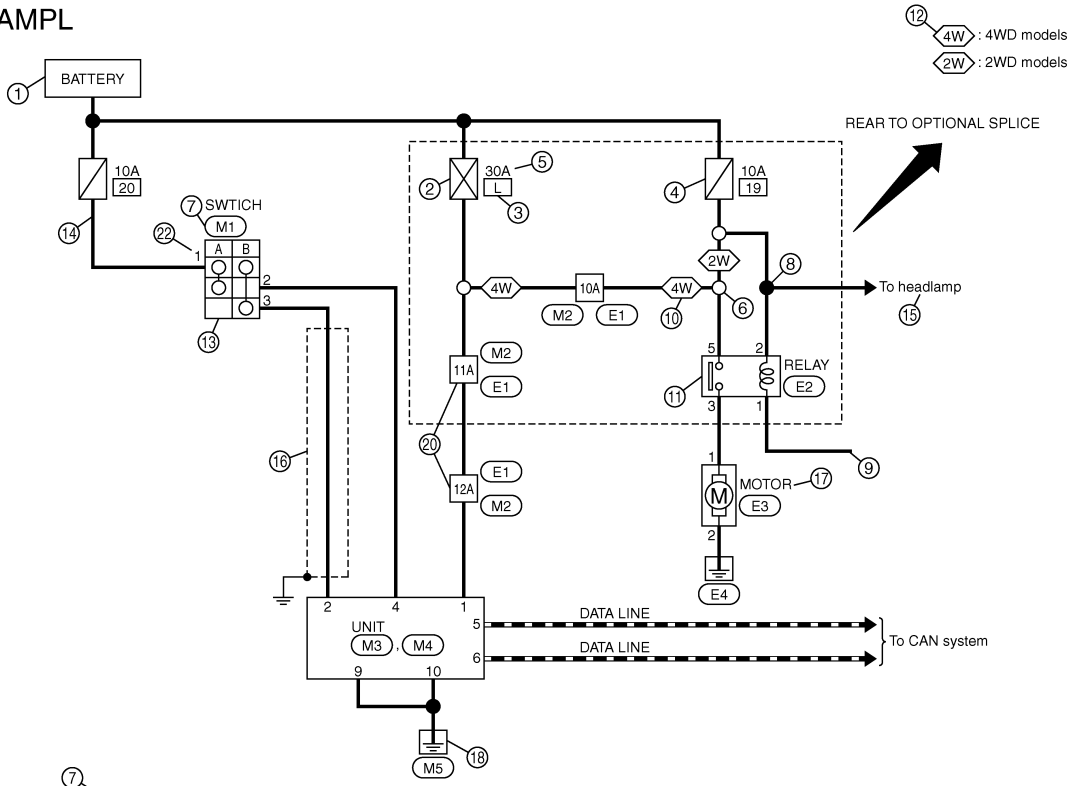

7

Connector No.	M3
Connector Name	UNIT
Connector Type	NS06FW-M2

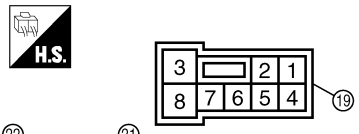

22 21

Terminal No.	Color of Wire	Signal Name [Specification]
1	W	BAT
2	G	SWITCH B
4	V	SWITCH A
5	L	CAN-H
6	P	CAN-L

Connector No.	M4
Connector Name	UNIT
Connector Type	NS10FW-CS

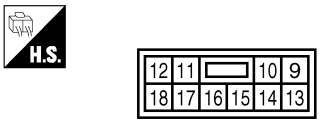

Terminal No.	Color of Wire	Signal Name [Specification]
9	B	GND
10	B	GND

Optional splice

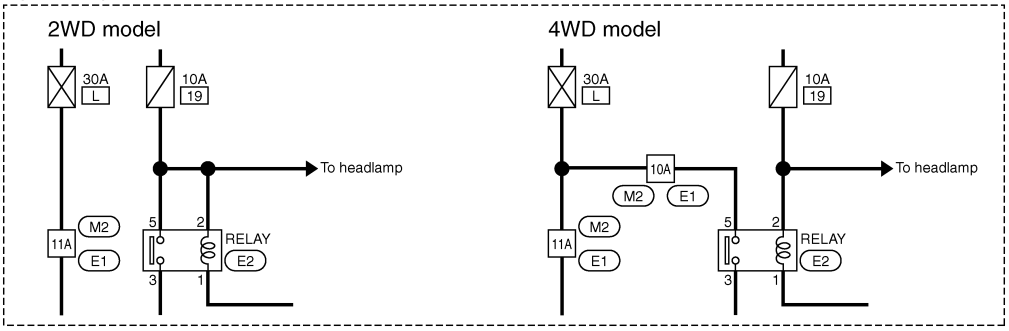

JCAWA0005GE

Description

INFOID:0000000003852768

Number	Item	Description
1	Power supply	• This means the power supply of fusible link or fuse.
2	Fusible link	• “X” means the fusible link.
3	Number of fusible link/ fuse	• This means the number of fusible link or fuse location.
4	Fuse	• “/” means the fuse.
5	Current rating of fusible link/fuse	• This means the current rating of the fusible link or fuse.
6	Optional splice	• The open circle shows that the splice is optional depending on vehicle application.
7	Connector number	• The letter shows which harness the connector is located in. • Example “M”: main harness. For detail and to locate the connector, refer to, .PG-83, "How To Read Harness Layout",PG-85, "Main Harness"
8	Splice	• The shaded circle “●” means the splice.
9	Page crossing	• This circuit continues to an adjacent page.
10	Option abbreviation	• This means the vehicle specifications which layouts the circuit between “○”.
11	Relay	• This shows an internal representation of the relay.
12	Option description	• This shows a description of the option abbreviation used on the page.
13	Switch	• This shows that continuity exists between terminals 1 and 2 when the switch is in the A position. Continuity exists between terminals 1 and 3 when the switch is in the B position.
14	Circuit (Wiring)	• This means the wiring.
15	System branch	• This shows that the circuit is branched to other systems.
16	Shielded line	• The line enclosed by broken line circle shows shield wire.
17	Component name	• This shows the name of a component.
18	Ground (GND)	• This shows the ground connection.
19	Connector	• This means the connector information. • This unit-side is described by the connector symbols.
20	Connectors	• This means that a transmission line bypasses two connectors or more.
21	Wire color	• This shows a code for the color of the wire. B = Black W = White R = Red G = Green L = Blue Y = Yellow LG = Light Green BR = Brown OR or O = Orange P = Pink PU or V (Violet) = Purple GY or GR = Gray SB = Sky Blue CH = Dark Brown DG = Dark Green • When the wire color is striped, the base color is given first, followed by the stripe color as shown below: Example: L/W = Blue with White Stripe
22	Terminal number	• This means the terminal number of a connector.

SWITCH POSITIONS

Switches are shown in wiring diagrams as if the vehicle is in the “normal” condition.
A vehicle is in the “normal” condition when:

- ignition switch is “OFF”,
- doors, hood and trunk lid/back door are closed,
- pedals are not depressed, and
- parking brake is released.

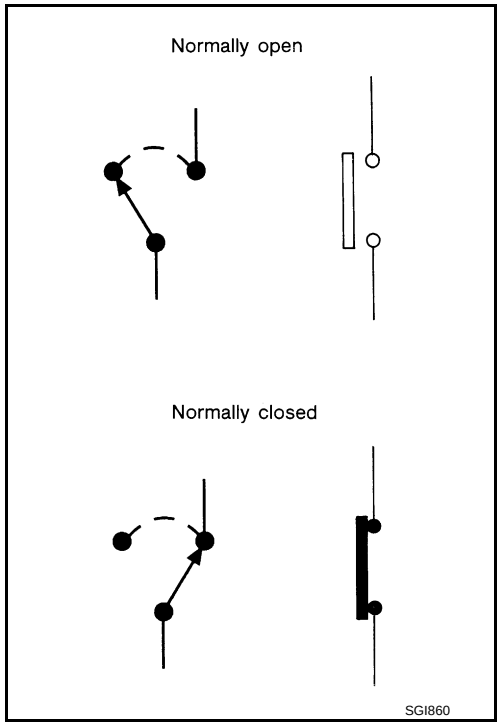

MULTIPLE SWITCH

The continuity of multiple switch is described in two ways as shown below.

- The switch chart is used in schematic diagrams.
- The switch diagram is used in wiring diagrams.

Example

(SWITCH CHART)

WIPER SWITCH

	OFF	INT	LO	HI	WASH
1					○
2				○	
3	○	○	○		
4	○	○			
5		○			
6		○	○	○	○

(SWITCH DIAGRAM)

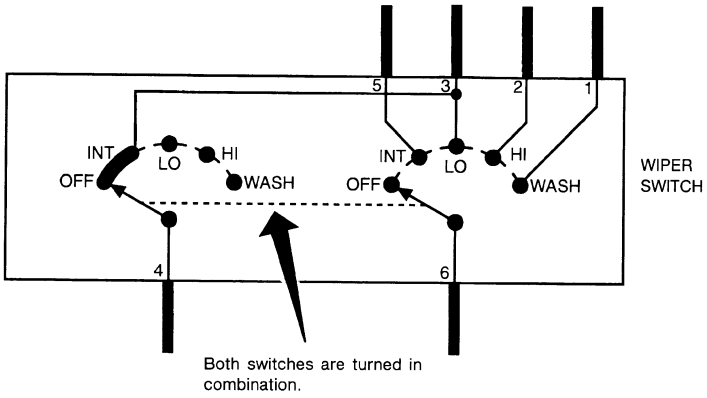

Continuity circuit of wiper switch

SWITCH POSITION	CONTINUITY CIRCUIT
OFF	3-4
INT	3-4, 5-6
LO	3-6
HI	2-6
WASH	1-6

JSAIA0017GB

ABBREVIATIONS

Abbreviation List

INFOID:0000000003852769

The following **ABBREVIATIONS** are used:

ABBREVIATION	DESCRIPTION
A/C	Air Conditioner
A/T	Automatic Transaxle/Transmission
ATF	Automatic Transmission Fluid
D_1	Drive range 1st gear
D_2	Drive range 2nd gear
D_3	Drive range 3rd gear
D_4	Drive range 4th gear
FR, RR	Front, Rear
LH, RH	Left-Hand, Right-Hand
M/T	Manual Transaxle/Transmission
OD	Overdrive
P/S	Power Steering
SAE	Society of Automotive Engineers, Inc.
SDS	Service Data and Specifications
SST	Special Service Tools
2WD	2-Wheel Drive
2_2	2nd range 2nd gear
2_1	2nd range 1st gear
1_2	1st range 2nd gear
1_1	1st range 1st gear

TIGHTENING TORQUE OF STANDARD BOLTS

Description

INFOID:0000000003852910

This vehicle has both new standard based on ISO* and previous standard bolts/nuts. There are some differences between these two types of bolts/ nuts; shape of the head, grade of strength, hexagonal width across flats and the standard tightening torque.

- For guidance in discriminating, refer to GI-14, "Tightening Torque Table (New Standard Included)".
- The new standard machine screws and tapping screws have a head of ISO standard torx recess.
- If the tightening torque is not described in the description or figure, refer to GI-14, "Tightening Torque Table (New Standard Included)".

*ISO: International Organization for Standardization

Tightening Torque Table (New Standard Included)

INFOID:0000000003852911

CAUTION:

- **The special parts are excluded.**
- **The bolts/nuts in these tables have a strength (discrimination) number/symbol assigned to the head or the like. As to the relation between the strength grade in these tables and the strength (discrimination) number/symbol, refer to “DISCRIMINATION OF BOLTS AND NUTS”.**

PREVIOUS STANDARD

Grade (Strength grade)	Bolt size	Bolt diameter mm	Hexagonal width across flats mm	Pitch mm	Tightening torque (Without lubricant)							
					Hexagon head bolt				Hexagon flange bolt			
					N·m	kg-m	ft-lb	in-lb	N·m	kg-m	ft-lb	in-lb
4T	M6	6.0	10	1.0	5.5	0.56	4	49	7	0.71	5	62
	M8	8.0	12	1.25	13.5	1.4	10	—	17	1.7	13	—
				1.0	13.5	1.4	10	—	17	1.7	13	—
	M10	10.0	14	1.5	28	2.9	21	—	35	3.6	26	—
				1.25	28	2.9	21	—	35	3.6	26	—
	M12	12.0	17	1.75	45	4.6	33	—	55	5.6	41	—
				1.25	45	4.6	33	—	65	6.6	48	—
	M14	14.0	19	1.5	80	8.2	59	—	100	10	74	—
7T	M6	6.0	10	1.0	9	0.92	7	80	11	1.1	8	97
	M8	8.0	12	1.25	22	2.2	16	—	28	2.9	21	—
				1.0	22	2.2	16	—	28	2.9	21	—
	M10	10.0	14	1.5	45	4.6	33	—	55	5.6	41	—
				1.25	45	4.6	33	—	55	5.6	41	—
	M12	12.0	17	1.75	80	8.2	59	—	100	10	74	—
				1.25	80	8.2	59	—	100	10	74	—
	M14	14.0	19	1.5	130	13	96	—	170	17	125	—
9T	M6	6.0	10	1.0	11	1.1	8	—	13.5	1.4	10	—
	M8	8.0	12	1.25	28	2.9	21	—	35	3.6	26	—
				1.0	28	2.9	21	—	35	3.6	26	—
	M10	10.0	14	1.5	55	5.6	41	—	80	8.2	59	—
				1.25	55	5.6	41	—	80	8.2	59	—
	M12	12.0	17	1.75	100	10	74	—	130	13	96	—
				1.25	100	10	74	—	130	13	96	—
	M14	14.0	19	1.5	170	17	125	—	210	21	155	—

CAUTION:

TIGHTENING TORQUE OF STANDARD BOLTS

The parts with aluminum or the cast iron washer surface/thread surface are excluded.

NEW STANDARD BASED ON ISO

Grade (Strength grade)	Bolt size	Bolt diameter mm	Hexagonal width across flats mm	Pitch mm	Tightening torque							
					Hexagon head bolt				Hexagon flange bolt			
					N·m	kg-m	ft-lb	in-lb	N·m	kg-m	ft-lb	in-lb
4.8 (Without lubricant)	M6	6.0	10	1.0	5.5	0.56	4	49	7	0.71	5	62
	M8	8.0	13	1.25	13.5	1.4	10	—	17	1.7	13	—
				1.0	13.5	1.4	10	—	17	1.7	13	—
	M10	10.0	16	1.5	28	2.9	21	—	35	3.6	26	—
				1.25	28	2.9	21	—	35	3.6	26	—
	M12	12.0	18	1.75	45	4.6	33	—	55	5.6	41	—
				1.25	45	4.6	33	—	65	6.6	48	—
	M14	14.0	21	1.5	80	8.2	59	—	100	10	74	—
4.8 (With lubricant)	M6	6.0	10	1.0	4	0.41	3	35	5.5	0.56	4	49
	M8	8.0	13	1.25	11	1.1	8	—	13.5	1.4	10	—
				1.0	11	1.1	8	—	13.5	1.4	10	—
	M10	10.0	16	1.5	22	2.2	16	—	28	2.9	21	—
				1.25	22	2.2	16	—	28	2.9	21	—
	M12	12.0	18	1.75	35	3.6	26	—	45	4.6	33	—
				1.25	35	3.6	26	—	45	4.6	33	—
	M14	14.0	21	1.5	65	6.6	48	—	80	8.2	59	—
8.8 (With lubricant)	M6	6.0	10	1.0	8	0.82	6	71	10	1.0	7	89
	M8	8.0	13	1.25	21	2.1	15	—	25	2.6	18	—
				1.0	21	2.1	15	—	25	2.6	18	—
	M10	10.0	16	1.5	40	4.1	30	—	50	5.1	37	—
				1.25	40	4.1	30	—	50	5.1	37	—
	M12	12.0	18	1.75	70	7.1	52	—	85	8.7	63	—
				1.25	70	7.1	52	—	85	8.7	63	—
	M14	14.0	21	1.5	120	12	89	—	140	14	103	—
10.9 (With lubricant)	M6	6.0	10	1.0	10	1.0	7	89	12	1.2	9	106
	M8	8.0	13	1.25	27	2.8	20	—	32	3.3	24	—
				1.0	27	2.8	20	—	32	3.3	24	—
	M10	10.0	16	1.5	55	5.6	41	—	65	6.6	48	—
				1.25	55	5.6	41	—	65	6.6	48	—
	M12	12.0	18	1.75	95	9.7	70	—	110	11	81	—
				1.25	95	9.7	70	—	110	11	81	—
	M14	14.0	21	1.5	160	16	118	—	180	18	133	—

CAUTION:

1. **Use tightening torque with lubricant for the new standard bolts/nuts in principle. Friction coefficient stabilizer is applied to the new standard bolts/nuts.**
2. **However, use tightening torque without lubricant for the following cases. Friction coefficient stabilizer is not applied to the following bolts/nuts.**

- **Grade 4.8, M6 size bolt, Conical spring washer installed**
- **Paint removing nut (Size M6 and M8) for fixing with weld bolt**

DISCRIMINATION OF BOLTS AND NUTS

BOLTS

	Grade (Strength)	Discrimination	
Previous standard	4T (392N/mm²)	4	(No number/ symbol)
	7T (686N/mm²)	7	
	9T (883N/mm²)	9	
New Standard	4.8 (420N/mm²)	4.8	(No number/ symbol)
	8.8 (800N/mm²)	8.8	
	10.9 (1040N/mm²)	10.9	

NUTS

	Grade (Proof load stress)	Discrimination		
Previous standard	7N (686N/mm²)	(No number/ symbol)		
	9N (883N/mm²)	9		
New Standard	8 (800N/mm²)	8		(No number/ symbol)
	10 (1040N/mm²)	10		

NOTICE:
- A number is assigned on the side of the nuts in some cases.
- A number or symbol is assigned on the upper surface of the flange for the nut with flange.

	10

MACHINE SCREWS AND TAPPING SCREWS

Shape of the head :
Cross recess for the previous standard
Torx recess for the new standard

Screw size	Screw diameter	Torx size
M4	4.0	T20
M5	5.0	T20
M6	6.0	T30

NOTICE:
Use torx size T20 (united with M4 screw) for M5 screw although ISO standard specifies T25.

SAIA0453E

TERMINOLOGY

SAE J1930 Terminology List

INFOID:0000000003852771

All emission related terms used in this publication in accordance with SAE J1930 are listed. Accordingly, new terms, new acronyms/abbreviations and old terms are listed in the following chart.

NEW TERM	NEW ACRONYM / ABBREVIATION	OLD TERM
Air cleaner	ACL	Air cleaner
Barometric pressure	BARO	***
Barometric pressure sensor-BCDD	BAROS-BCDD	BCDD
Camshaft position	CMP	***
Camshaft position sensor	CMPS	Crank angle sensor
Canister	***	Canister
Carburetor	CARB	Carburetor
Charge air cooler	CAC	Intercooler
Closed loop	CL	Closed loop
Closed throttle position switch	CTP switch	Idle switch
Clutch pedal position switch	CPP switch	Clutch switch
Continuous fuel injection system	CFI system	***
Continuous trap oxidizer system	CTOX system	***
Crankshaft position	CKP	***
Crankshaft position sensor	CKPS	***
Data link connector	DLC	***
Diagnostic test mode	DTM	Diagnostic mode
Diagnostic test mode selector	DTM selector	Diagnostic mode selector
Diagnostic test mode I	DTM I	Mode I
Diagnostic test mode II	DTM II	Mode II
Diagnostic trouble code	DTC	Malfunction code
Direct fuel injection system	DFI system	***
Distributor ignition system	DI system	Ignition timing control
Early fuel evaporation-mixture heater	EFE-mixture heater	Mixture heater
Early fuel evaporation system	EFE system	Mixture heater control
Electrically erasable programmable read only memory	EEPROM	***
Electronic ignition system	EI system	Ignition timing control
Engine control	EC	***
Engine control module	ECM	ECCS control unit
Engine coolant temperature	ECT	Engine temperature
Engine coolant temperature sensor	ECTS	Engine temperature sensor
Engine modification	EM	***
Engine speed	RPM	Engine speed
Erasable programmable read only memory	EPROM	***
Evaporative emission canister	EVAP canister	Canister
Evaporative emission system	EVAP system	Canister control solenoid valve
Exhaust gas recirculation valve	EGR valve	EGR valve

NEW TERM	NEW ACRONYM / ABBREVIATION	OLD TERM
Exhaust gas recirculation control-BPT valve	EGRC-BPT valve	BPT valve
Exhaust gas recirculation control-solenoid valve	EGRC-solenoid valve	EGR control solenoid valve
Exhaust gas recirculation temperature sensor	EGRT sensor	Exhaust gas temperature sensor
EGR temperature sensor		
Flash electrically erasable programmable read only memory	FEEPROM	***
Flash erasable programmable read only memory	FEPROM	***
Flexible fuel sensor	FFS	***
Flexible fuel system	FF system	***
Fuel pressure regulator	***	Pressure regulator
Fuel pressure regulator control solenoid valve	***	PRVR control solenoid valve
Fuel trim	FT	***
Heated Oxygen sensor	HO2S	Exhaust gas sensor
Idle air control system	IAC system	Idle speed control
Idle air control valve-air regulator	IACV-air regulator	Air regulator
Idle air control valve-auxiliary air control valve	IACV-AAC valve	Auxiliary air control (AAC) valve
Idle air control valve-FICD solenoid valve	IACV-FICD solenoid valve	FICD solenoid valve
Idle air control valve-idle up control solenoid valve	IACV-idle up control solenoid valve	Idle up control solenoid valve
Idle speed control-FI pot	ISC-FI pot	FI pot
Idle speed control system	ISC system	***
Ignition control	IC	***
Ignition control module	ICM	***
Indirect fuel injection system	IFI system	***
Intake air	IA	Air
Intake air temperature sensor	IAT sensor	Air temperature sensor
Knock	***	Detonation
Knock sensor	KS	Detonation sensor
Malfunction indicator lamp	MIL	Check engine light
Manifold absolute pressure	MAP	***
Manifold absolute pressure sensor	MAPS	***
Manifold differential pressure	MDP	***
Manifold differential pressure sensor	MDPS	***
Manifold surface temperature	MST	***
Manifold surface temperature sensor	MSTS	***
Manifold vacuum zone	MVZ	***
Manifold vacuum zone sensor	MVZS	***
Mass air flow sensor	MAFS	Air flow meter
Mixture control solenoid valve	MC solenoid valve	Air-fuel ratio control solenoid valve
Multiport fuel injection system	MFI system	Fuel injection control

NEW TERM	NEW ACRONYM / ABBREVIATION	OLD TERM
Nonvolatile random access memory	NVRAM	***
On board diagnostic system	OBD system	Self-diagnosis
Open loop	OL	Open loop
Oxidation catalyst	OC	Catalyst
Oxidation catalytic converter system	OC system	***
Oxygen sensor	O2S	Exhaust gas sensor
Park position switch	***	Park switch
Park/neutral position switch	PNP switch	Park/neutral switch Inhibitor switch Neutral position switch
Periodic trap oxidizer system	PTOX system	***
Positive crankcase ventilation	PCV	Positive crankcase ventilation
Positive crankcase ventilation valve	PCV valve	PCV valve
Powertrain control module	PCM	***
Programmable read only memory	PROM	***
Pulsed secondary air injection control solenoid valve	PAIRC solenoid valve	AIV control solenoid valve
Pulsed secondary air injection system	PAIR system	Air induction valve (AIV) control
Pulsed secondary air injection valve	PAIR valve	Air induction valve
Random access memory	RAM	***
Read only memory	ROM	***
Scan tool	ST	***
Secondary air injection pump	AIR pump	***
Secondary air injection system	AIR system	***
Sequential multiport fuel injection system	SFI system	Sequential fuel injection
Service reminder indicator	SRI	***
Simultaneous multiport fuel injection system	***	Simultaneous fuel injection
Smoke puff limiter system	SPL system	***
Supercharger	SC	***
Supercharger bypass	SCB	***
System readiness test	SRT	***
Thermal vacuum valve	TVV	Thermal vacuum valve
Three way catalyst	TWC	Catalyst
Three way catalytic converter system	TWC system	***
Three way + oxidation catalyst	TWC + OC	Catalyst
Three way + oxidation catalytic converter system	TWC + OC system	***
Throttle body	TB	Throttle chamber SPI body
Throttle body fuel injection system	TBI system	Fuel injection control
Throttle position	TP	Throttle position
Throttle position sensor	TPS	Throttle sensor
Throttle position switch	TP switch	Throttle switch
Torque converter clutch solenoid valve	TCC solenoid valve	Lock-up cancel solenoid Lock-up solenoid

NEW TERM	NEW ACRONYM / ABBREVIATION	OLD TERM
Transmission control module	TCM	A/T control unit
Turbocharger	TC	Turbocharger
Vehicle speed sensor	VSS	Vehicle speed sensor
Volume air flow sensor	VAFS	Air flow meter
Warm up oxidation catalyst	WU-OC	Catalyst
Warm up oxidation catalytic converter system	WU-OC system	***
Warm up three way catalyst	WU-TWC	Catalyst
Warm up three way catalytic converter system	WU-TWC system	***
Wide open throttle position switch	WOTP switch	Full switch

***: Not applicable

FEATURES OF NEW MODEL

IDENTIFICATION INFORMATION

Model Variation

INFOID:0000000003852772

Destination	Body	Engine	Transmission	Axle	Grade	Model
Russia and Ukraine	Sedan	VQ25DE	CVT	2WD	250XE	BLGULCW-EQA
					250XL-V6	BLGULEW-EQA
					250XV-V6	BLGULGW-EQA
		VQ35DE			350XV-V6	BLJULHW-EQA

Model variation code (Prefix and suffix designations)

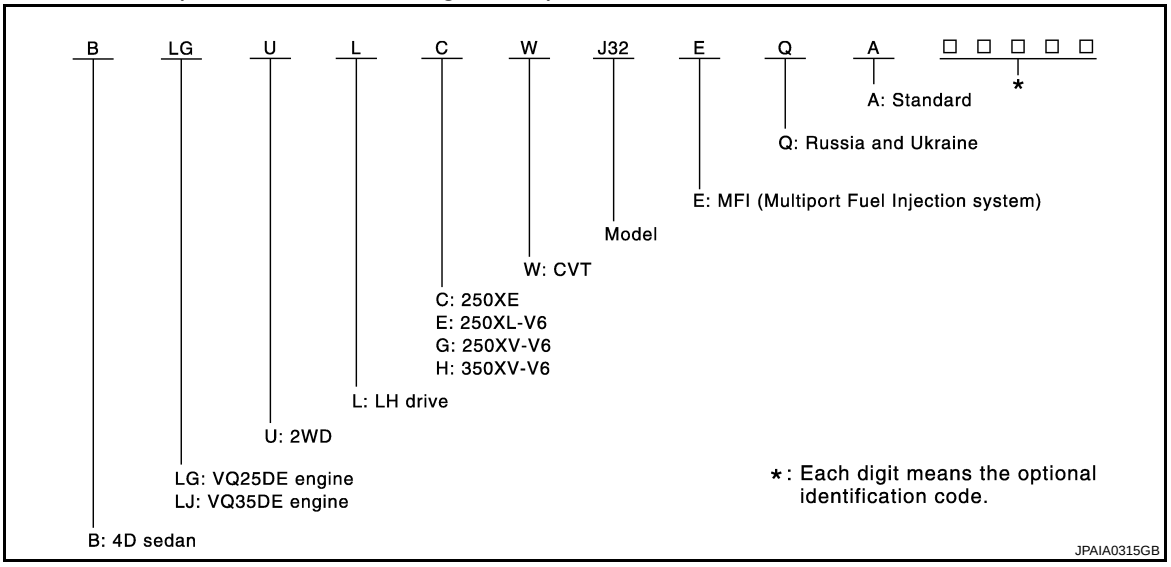

Information About Identification or Model Code

INFOID:0000000003852773

IDENTIFICATION NUMBER

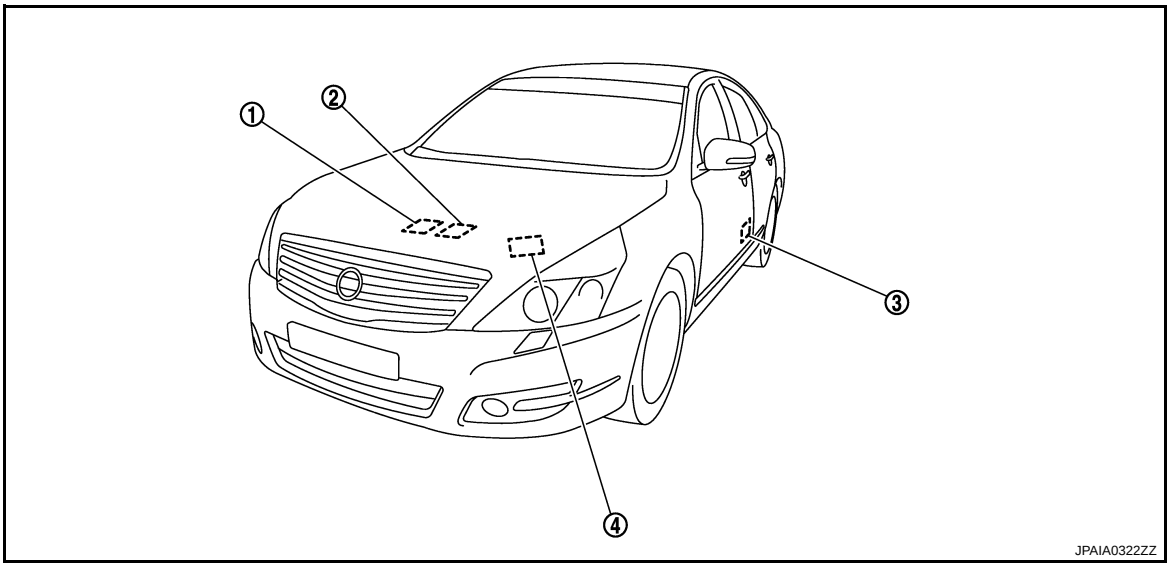

1. Vehicle identification plate (Under the front right-side seat)
2. Vehicle identification number (Chassis number) (Under the front right-side seat)
3. Tire placard
4. Air conditioner specification label

VEHICLE IDENTIFICATION NUMBER ARRANGEMENT

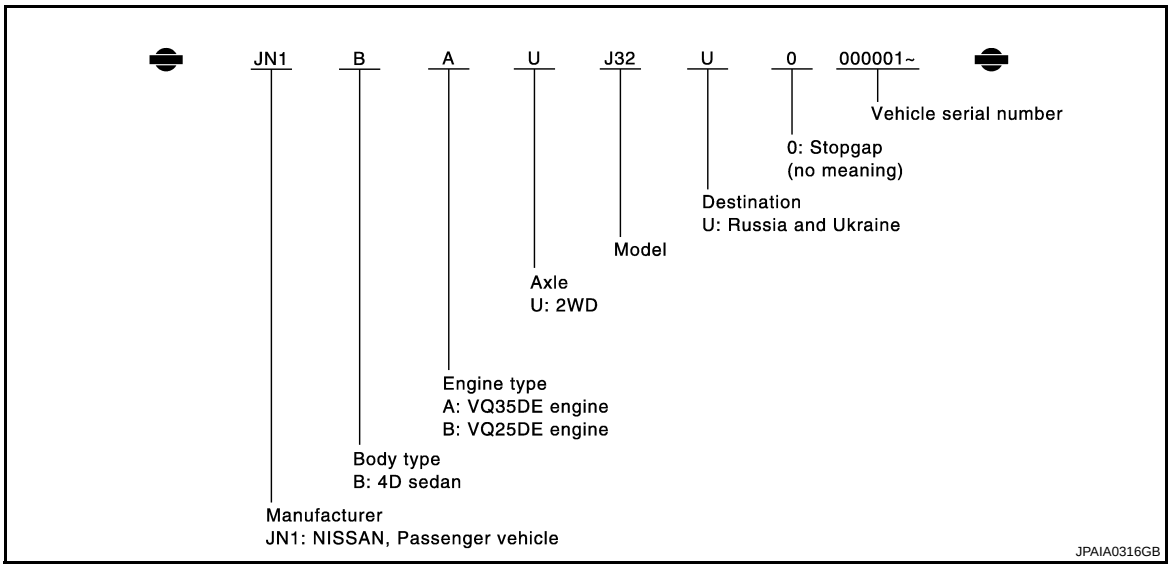

IDENTIFICATION PLATE

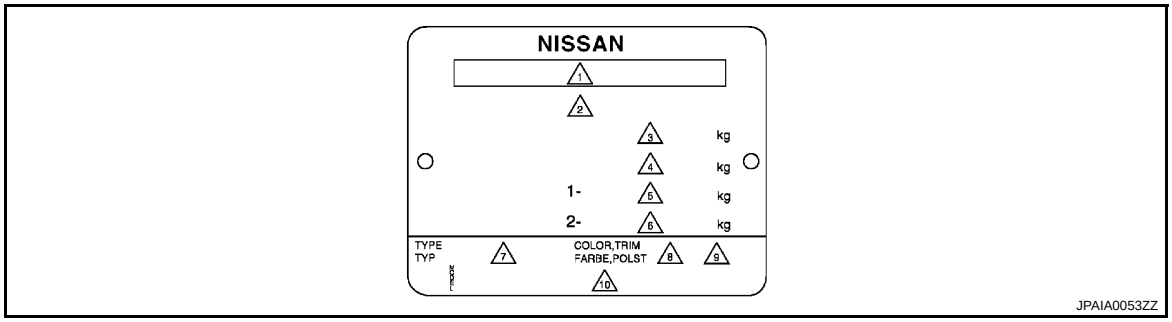

1. Type approval number (Models with WVTA)
   Blank (Models without WVTA)
2. Vehicle identification number (Chassis number)
3. Gross vehicle weight
4. Gross combination weight
   + Gross trailing capacity (weight)
5. Gross axle weight (Front)
6. Gross axle weight (Rear)
7. Vehicle type
8. Body color code
9. Trim color code
10. Model variation code

ENGINE SERIAL NUMBER

⇦ : Vehicle front

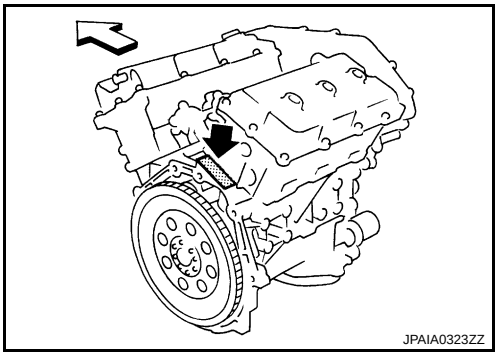

AUTOMATIC TRANSMISSION NUMBER

CVT Unit (RE0F10A)

⇦ : Vehicle front

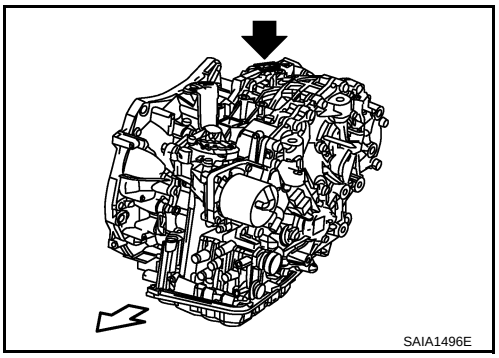

CVT Unit (RE0F09B)

⇦ : Unit front

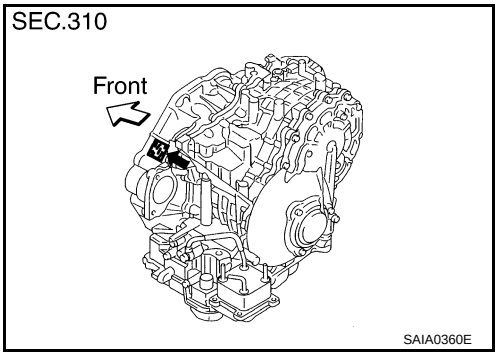

Dimensions

INFOID:0000000003852774

Unit: mm (in)

Overall length	4,850 (190.9)
Overall width	1,795 (70.7)
Overall height	1,475 (58.1)
Front tread	1,560 (61.4)*1, 1,550 (61.0)*2
Rear tread	1,560 (61.4)*1, 1,550 (61.0)*2
Wheelbase	2,775 (109.3)

*1: 205/65R16 tire model

*2: 215/55R17 tire model

Wheels & Tires

INFOID:0000000003852775

Application		Conventional	Spare
Road wheel/offset	mm (in)	16 X 6-1/2J/40 (1.57) 17 X 7J/45 (1.77)	Conventional
Tire size		205/65R16 95H 215/55R17 94V	

PRECAUTION

PRECAUTIONS

Description

INFOID:0000000003852776

Observe the following precautions to ensure safe and proper servicing. These precautions are not described in each individual section.

Precaution for Supplemental Restraint System (SRS) "AIR BAG" and "SEAT BELT PRE-TENSIONER"

INFOID:0000000003852830

The Supplemental Restraint System such as “AIR BAG” and “SEAT BELT PRE-TENSIONER”, used along with a front seat belt, helps to reduce the risk or severity of injury to the driver and front passenger for certain types of collision. Information necessary to service the system safely is included in the “SRS AIRBAG” and “SEAT BELT” of this Service Manual.

WARNING:

- **To avoid rendering the SRS inoperative, which could increase the risk of personal injury or death in the event of a collision which would result in air bag inflation, all maintenance must be performed by an authorized NISSAN/INFINITI dealer.**
- **Improper maintenance, including incorrect removal and installation of the SRS, can lead to personal injury caused by unintentional activation of the system. For removal of Spiral Cable and Air Bag Module, see the “SRS AIRBAG”.**
- **Never use electrical test equipment on any circuit related to the SRS unless instructed to in this Service Manual. SRS wiring harnesses can be identified by yellow and/or orange harnesses or harness connectors.**

Precautions For Xenon Headlamp Service

INFOID:0000000003852778

WARNING:

Comply with the following warnings to prevent any serious accident.

- **Disconnect the battery cable (negative terminal) or the power supply fuse before installing, removing, or touching the xenon headlamp (bulb included). The xenon headlamp contains high-voltage generated parts.**
- **Never work with wet hands.**
- **Check the xenon headlamp ON-OFF status after assembling it to the vehicle. Never turn the xenon headlamp ON in other conditions. Connect the power supply to the vehicle-side connector. (Turning it ON outside the lamp case may cause fire or visual impairments.)**
- **Never touch the bulb glass immediately after turning it OFF. It is extremely hot.**

CAUTION:

Comply with the following cautions to prevent any error and malfunction.

- **Install the xenon bulb securely. (Insufficient bulb socket installation may melt the bulb, the connector, the housing, etc. by high-voltage leakage or corona discharge.)**
- **Never perform HID circuit inspection with a tester.**
- **Never touch the xenon bulb glass with hands. Never put oil and grease on it.**
- **Dispose of the used xenon bulb after packing it in thick vinyl without breaking it.**
- **Never wipe out dirt and contamination with organic solvent (thinner, gasoline, etc.).**

Precaution Necessary for Steering Wheel Rotation after Battery Disconnect

INFOID:0000000003852856

NOTE:

- Before removing and installing any control units, first turn the push-button ignition switch to the LOCK position, then disconnect both battery cables.
- After finishing work, confirm that all control unit connectors are connected properly, then re-connect both battery cables.
- Always use CONSULT-III to perform self-diagnosis as a part of each function inspection after finishing work. If a DTC is detected, perform trouble diagnosis according to self-diagnosis results.

This vehicle is equipped with a push-button ignition switch and a steering lock unit.
If the battery is disconnected or discharged, the steering wheel will lock and cannot be turned.

If turning the steering wheel is required with the battery disconnected or discharged, follow the procedure below before starting the repair operation.

OPERATION PROCEDURE

1. Connect both battery cables.
   NOTE:
   Supply power using jumper cables if battery is discharged.
2. Turn the push-button ignition switch to ACC position.
   (At this time, the steering lock will be released.)
3. Disconnect both battery cables. The steering lock will remain released with both battery cables disconnected and the steering wheel can be turned.
4. Perform the necessary repair operation.
5. When the repair work is completed, re-connect both battery cables. With the brake pedal released, turn the push-button ignition switch from ACC position to ON position, then to LOCK position. (The steering wheel will lock when the push-button ignition switch is turned to LOCK position.)
6. Perform self-diagnosis check of all control units using CONSULT-III.

Precaution for Procedure without Cowl Top Cover

INFOID:0000000003852857

When performing the procedure after removing cowl top cover, cover the lower end of windshield with urethane, etc.

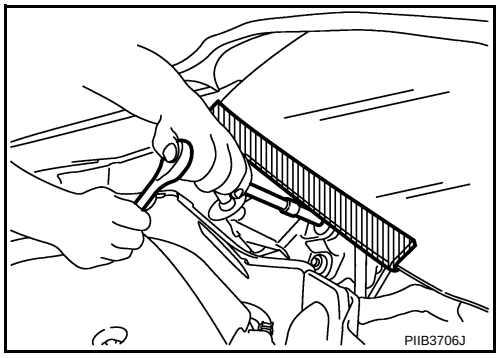

General Precautions

INFOID:0000000003852781

- Do not operate the engine for an extended period of time without proper exhaust ventilation.
  Keep the work area well ventilated and free of any inflammable materials. Special care should be taken when handling any inflammable or poisonous materials, such as gasoline, refrigerant gas, etc. When working in a pit or other enclosed area, be sure to properly ventilate the area before working with hazardous materials.
  Do not smoke while working on the vehicle.

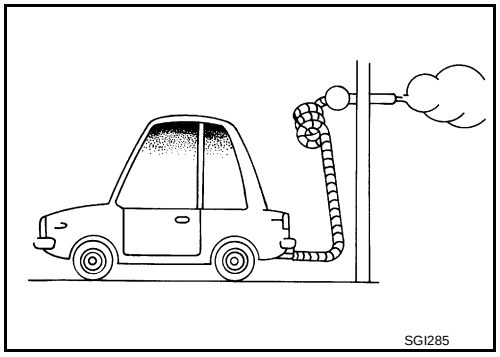

- Before jacking up the vehicle, apply wheel chocks or other tire blocks to the wheels to prevent the vehicle from moving. After jacking up the vehicle, support the vehicle weight with safety stands at the points designated for proper lifting before working on the vehicle.
  These operations should be done on a level surface.
- When removing a heavy component such as the engine or transaxle/transmission, be careful not to lose your balance and drop them. Also, do not allow them to strike adjacent parts, especially the brake tubes and master cylinder.

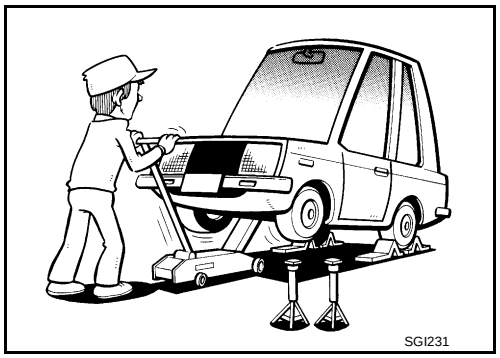

- Before starting repairs which do not require battery power:
  Turn off ignition switch.
  Disconnect the negative battery terminal.
- If the battery terminals are disconnected, recorded memory of radio and each control unit is erased.

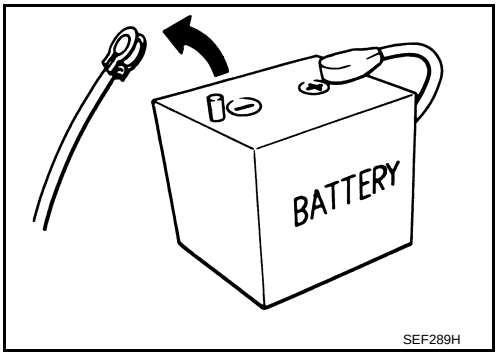

- To prevent serious burns:
  Avoid contact with hot metal parts.
  Do not remove the radiator cap when the engine is hot.
- Dispose of drained oil or the solvent used for cleaning parts in an appropriate manner.
- Do not attempt to top off the fuel tank after the fuel pump nozzle shuts off automatically.
  Continued refueling may cause fuel overflow, resulting in fuel spray and possibly a fire.
- Clean all disassembled parts in the designated liquid or solvent prior to inspection or assembly.
- Replace oil seals, gaskets, packings, O-rings, locking washers, cotter pins, self-locking nuts, etc. with new ones.

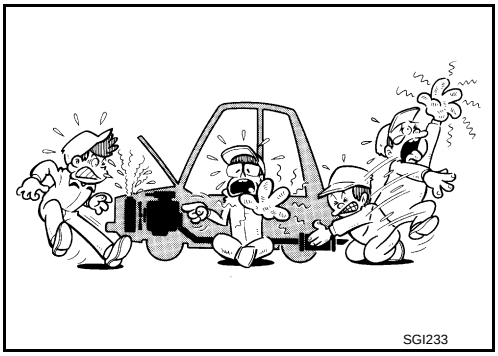

- Replace inner and outer races of tapered roller bearings and needle bearings as a set.
- Arrange the disassembled parts in accordance with their assembled locations and sequence.
- Do not touch the terminals of electrical components which use microcomputers (such as ECM).
  Static electricity may damage internal electronic components.
- After disconnecting vacuum or air hoses, attach a tag to indicate the proper connection.
- Use only the fluids and lubricants specified in this manual.
- Use approved bonding agent, sealants or their equivalents when required.
- Use hand tools, power tools (disassembly only) and recommended special tools where specified for safe and efficient service repairs.
- When repairing the fuel, oil, water, vacuum or exhaust systems, check all affected lines for leaks.

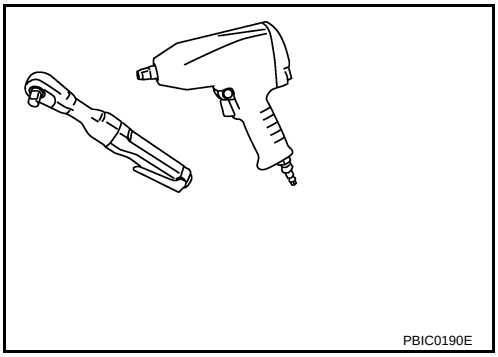

- Before servicing the vehicle:
  Protect fenders, upholstery and carpeting with appropriate covers.
  Take caution that keys, buckles or buttons do not scratch paint.

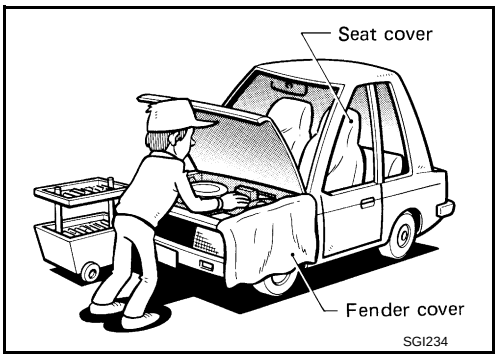

WARNING:

To prevent ECM from storing the diagnostic trouble codes, do not carelessly disconnect the harness connectors which are related to the engine control system and TCM (transmission control module)

system. The connectors should be disconnected only when working according to the WORK FLOW of TROUBLE DIAGNOSES in EC and AT sections.

Three Way Catalyst

INFOID:0000000003852782

If a large amount of unburned fuel flows into the catalyst, the catalyst temperature will be excessively high. To prevent this, follow the instructions.

- Use unleaded gasoline only. Leaded gasoline will seriously damage the three way catalyst.
- When checking for ignition spark or measuring engine compression, make tests quickly and only when necessary.
- Do not run engine when the fuel tank level is low, otherwise the engine may misfire, causing damage to the catalyst.

Do not place the vehicle on flammable material. Keep flammable material off the exhaust pipe and the three way catalyst.

Multiport Fuel Injection System or Engine Control System

INFOID:0000000003852783

- Before connecting or disconnecting any harness connector for the multiport fuel injection system or ECM:
  Turn ignition switch to “OFF” position.
  Disconnect negative battery terminal.
  Otherwise, there may be damage to ECM.
- Before disconnecting pressurized fuel line from fuel pump to injectors, be sure to release fuel pressure.
- Be careful not to jar components such as ECM and mass air flow sensor.

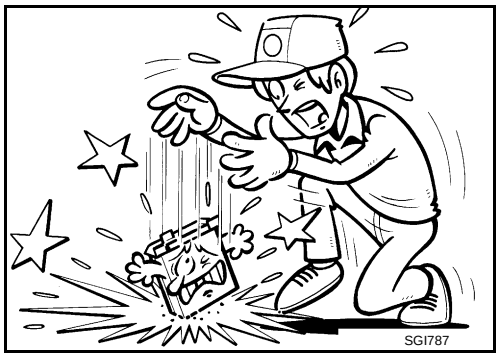

Hoses

INFOID:0000000003852784

HOSE REMOVAL AND INSTALLATION

- To prevent damage to rubber hose, do not pry off rubber hose with tapered tool or screwdriver.

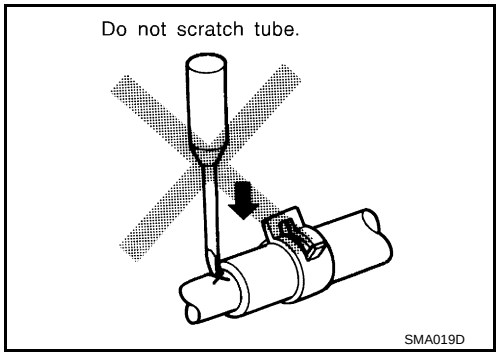

- To reinstall the rubber hose securely, make sure that hose insertion length and orientation is correct. (If tube is equipped with hose stopper, insert rubber hose into tube until it butts up against hose stopper.)

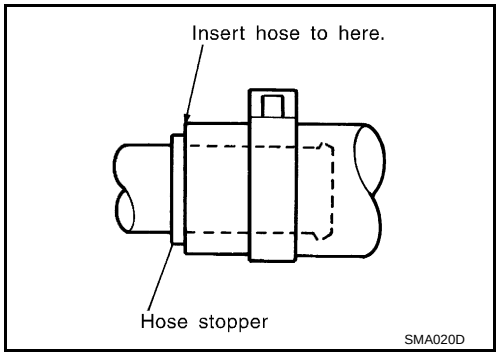

HOSE CLAMPING

- If old rubber hose is re-used, install hose clamp in its original position (at the indentation where the old clamp was). If there is a trace of tube bulging left on the old rubber hose, align rubber hose at that position.
- Discard old clamps; replace with new ones.

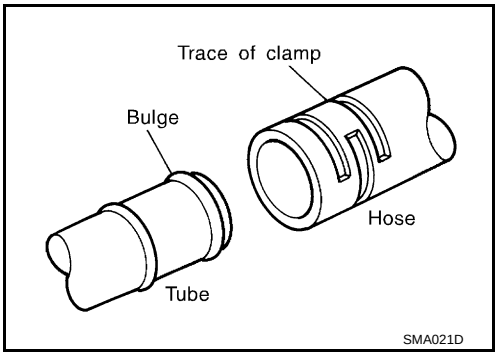

- After installing plate clamps, apply force to them in the direction of the arrow, tightening rubber hose equally all around.

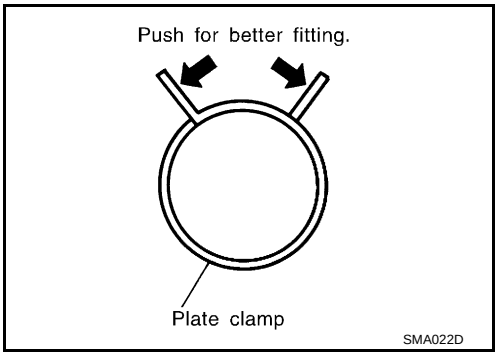

Engine Oils

INFOID:0000000003852785

Prolonged and repeated contact with used engine oil may cause skin cancer. Try to avoid direct skin contact with used oil.
If skin contact is made, wash thoroughly with soap or hand cleaner as soon as possible.

HEALTH PROTECTION PRECAUTIONS

- Avoid prolonged and repeated contact with oils, particularly used engine oils.
- Wear protective clothing, including impervious gloves where practicable.
- Do not put oily rags in pockets.
- Avoid contaminating clothes, particularly underpants, with oil.
- Heavily soiled clothing and oil-impregnated footwear should not be worn. Overalls must be cleaned regularly.
- First aid treatment should be obtained immediately for open cuts and wounds.
- Use barrier creams, applying them before each work period, to help the removal of oil from the skin.
- Wash with soap and water to ensure all oil is removed (skin cleansers and nail brushes will help). Preparations containing lanolin replace the natural skin oils which have been removed.
- Do not use gasoline, kerosene, diesel fuel, gas oil, thinners or solvents for cleaning skin.
- If skin disorders develop, obtain medical advice without delay.
- Where practical, degrease components prior to handling.
- Where there is a risk of eye contact, eye protection should be worn, for example, chemical goggles or face shields; in addition an eye wash facility should be provided.

ENVIRONMENTAL PROTECTION PRECAUTIONS

Dispose of used oil and used oil filters through authorized waste disposal contractors to licensed waste disposal sites, or to the waste oil reclamation trade. If in doubt, contact the local authority for advice on disposal facilities.
It is illegal to pour used oil on to the ground, down sewers or drains, or into water sources.
The regulations concerning pollution vary between regions.

Air Conditioning

INFOID:0000000003852786

Use an approved refrigerant recovery unit any time the air conditioning system must be discharged. Refer to HA section “REFRIGERATION SYSTEM” for specific instructions.

Fuel

INFOID:0000000003852787

CAUTION:
Do not use leaded gasoline. Using leaded gasoline will damage the three way catalyst. Using a fuel other than that specified could adversely affect the emission control devices and systems, and could also affect the warranty coverage validity.

VQ35DE

Use Unleaded premium gasoline of at least 95 octane (RON).
If unleaded premium gasoline is not used, unleaded regular gasoline with an octane rating of at least 91 (RON) may be used at slightly redused performance. However, for maximum vehicle performance and the best driveability, the use of unleaded premium gasoline is recommended.

VQ25DE

Use unleaded regular gasoline of at least 91 octane (RON).
Use unleaded premium gasoline if instructed on the fuel filler lid.

LIFTING POINT

Commercial Service Tools

INFOID:0000000003852788

Tool name	Description
Board on attachment	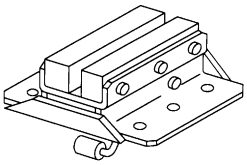 S-NT001
Safety stand attachment	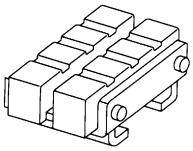 S-NT002

CAUTION:

- **Every time the vehicle is lifted up, maintain the complete vehicle curb condition.**
- **Since the vehicle's center of gravity changes when removing main parts on the front side (engine, transmission, suspension etc.), support a jack up point on the rear side garage jack with a mission jack or equivalent.**
- **Since the vehicle's center of gravity changes when removing main parts on the rear side (rear axle, suspension, etc.), support a jack up point on the front side garage jack with a mission jack or equivalent.**
- **Be careful not to smash or do not do anything that would affect piping parts.**

Garage Jack and Safety Stand and 2-Pole Lift

INFOID:0000000003852789

WARNING:

- **Park the vehicle on a level surface when using the jack. Make sure to avoid damaging pipes, tubes, etc. under the vehicle.**
- **Never get under the vehicle while it is supported only by the jack. Always use safety stands when you have to get under the vehicle.**
- **Place wheel chocks at both front and back of the wheels on the ground.**
- **When lifting the vehicle, open the lift arms as wide as possible and ensure that the front and rear of the vehicle are well balanced.**
- **When setting the lift arm, do not allow the arm to contact the brake tubes, brake cable, fuel lines and sill spoiler.**

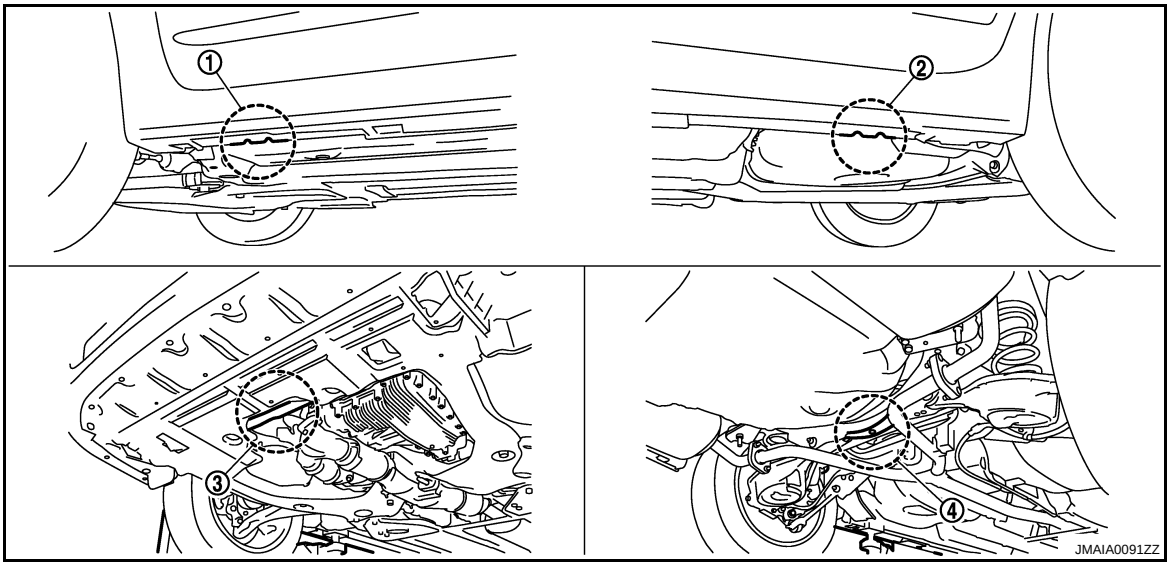

1. Safety stand point and lift up point (front)
2. Safety stand point and lift up point (rear)
3. Garage jack point (front)
4. Garage jack point (rear)

CAUTION:
There is canister just behind Garage jack point rear. Jack up be carefully.

Board-On Lift

INFOID:0000000003852790

CAUTION:
Make sure vehicle is empty when lifting.

- **The board-on lift attachment (A) set at front end of vehicle should be set on the front of the sill under the front door opening.**
- **Position attachments at front and rear ends of board-on lift.**

⇦ : Vehicle front

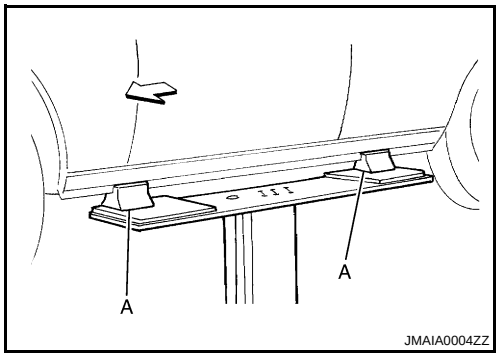

TOW TRUCK TOWING

Tow Truck Towing

INFOID:0000000003852791

CAUTION:
- **All applicable state or Provincial laws and local laws regarding the towing operation must be obeyed.**
- **It is necessary to use proper towing equipment to avoid possible damage to the vehicle during towing operation. Towing is in accordance with Towing Procedure Manual at dealer.**
- **Always attach safety chains before towing.**
- **When towing, make sure that the transaxle, steering system and powertrain are in good order. If any unit is damaged, dollies must be used.**
- **Never tow a CVT model with the rear wheels raised and the front wheels on the ground. This may cause serious and expensive damage to the transaxle. If it is necessary to tow the vehicle with the rear wheels raised, always use towing dollies under the front wheels.**
- **Never tow an automatic transaxle model from the rear (that is backward) with four wheels on the ground. This may cause serious and expensive damage to the transaxle.**

2WD MODELS

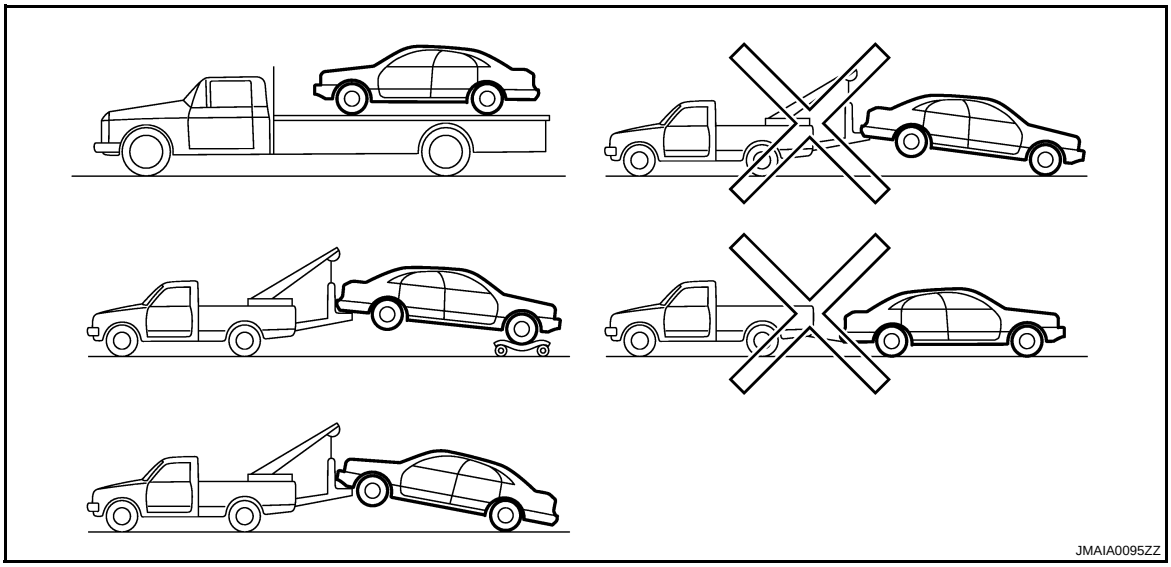

NISSAN recommends that the vehicle be towed with the driving (front) wheels off the ground.

CAUTION:
- **Always release the parking brake when towing the vehicle with the front wheels raised with the rear wheels on the ground.**
- **When the battery of a vehicle equipped with the Intelligent Key system is dischanged, the vehicle should be towed with the front wheels on towing dollies or place the vehicle on a flat bed truck.**

Vehicle Recovery (Freeing a Stuck Vehicle)

INFOID:0000000003852792

FRONT

Securely install the vehicle recovery hook stored with jacking tools. Make sure that the hook is properly secured in the stored place after use.

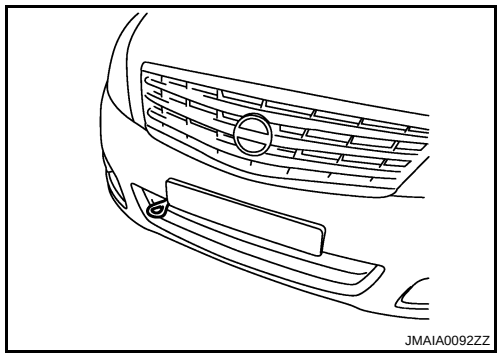

WARNING:
- **Stand clear of a stuck vehicle.**
- **Do not spin your tires at high speed. This could cause them to explode and result in serious injury. Parts of your vehicle could also overheat and be damaged.**

CAUTION:
- **Tow chains or cables must be attached only to the vehicle recovery hooks or main structural members of the vehicle. Otherwise, the vehicle body will be damaged.**

- **Do not use the vehicle tie downs to free a vehicle stuck in sand, snow, mud, etc. Never tow the vehicle using the vehicle tie downs or recovery hooks.**
- **Always pull the cable straight out from the front of the vehicle. Never pull on the hook at an angle.**
- **Pulling devices should be routed so they do not touch any part of the suspension, steering, brake or cooling systems.**
- **Pulling devices such as ropes or canvas straps are not recommended for use in vehicle towing or recovery.**

REAR

WARNING:

- **Rear hook is not available.**

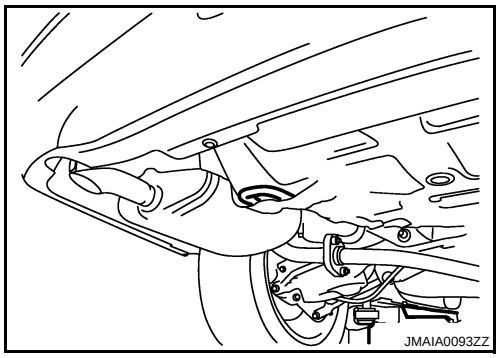

AUTOMATIC TRANSMISSION

To tow a vehicle equipped with an automatic transmission, an appropriate vehicle dolly **MUST** be placed under the towed vehicle's drive wheels. **Always** follow the dolly manufacture's recommendations when using their product.
If the vehicle is stuck in sand, snow, mud, etc., use the following procedure:

1. Turn off the Vehicle Dynamic Control System.
2. Make sure the area in front and behind the vehicle is clear of obstructions.
3. Turn the steering wheel right and left to clear an area around the front tires.
4. Slowly rock the vehicle forward and backward.
   Shift back and forth between R (reverse) and D (drive).
   Apply the accelerator as little as possible to maintain the rocking motion.
   Release the accelerator pedal before shifting between R and D.
   Do not spin the tires above 35 mph (55 km/h).
5. If the vehicle can not be freed after a few tries, contact a professional towing service to remove the vehicle.

BASIC INSPECTION

SERVICE INFORMATION FOR ELECTRICAL INCIDENT

Work Flow

INFOID:0000000003852793

WORK FLOW

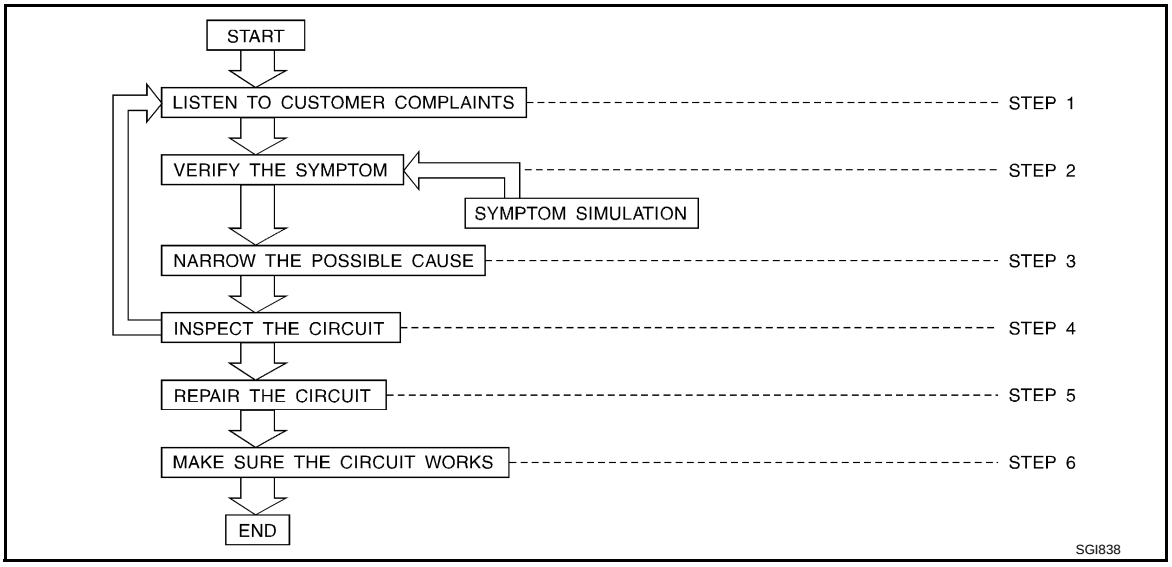

STEP	DESCRIPTION	
STEP 1	Get detailed information about the conditions and the environment when the incident occurred. The following are key pieces of information required to make a good analysis:	
	WHAT	Vehicle Model, Engine, Transmission/Transaxle and the System (i.e. Radio).
	WHEN	Date, Time of Day, Weather Conditions, Frequency.
	WHERE	Road Conditions, Altitude and Traffic Situation.
	HOW	System Symptoms, Operating Conditions (Other Components Interaction). Service History and if any After Market Accessories have been installed.
STEP 2	Operate the system, road test if necessary. Verify the parameter of the incident. If the problem cannot be duplicated, refer to “Incident Simulation Tests”.	
STEP 3	Get the proper diagnosis materials together including: • Power Supply Routing • System Operation Descriptions • Applicable Service Manual Sections • Check for any Service Bulletins Identify where to begin diagnosis based upon your knowledge of the system operation and the customer comments.	
STEP 4	Inspect the system for mechanical binding, loose connectors or wiring damage. Determine which circuits and components are involved and diagnose using the Power Supply Routing and Harness Layouts.	
STEP 5	Repair or replace the incident circuit or component.	
STEP 6	Operate the system in all modes. Verify the system works properly under all conditions. Make sure you have not inadvertently created a new incident during your diagnosis or repair steps.	

Control Units and Electrical Parts

INFOID:0000000003852794

PRECAUTIONS

- Never reverse polarity of battery terminals.
- Install only parts specified for a vehicle.
- Before replacing the control unit, check the input and output and functions of the component parts.
- Do not apply excessive force when disconnecting a connector.

- Do not apply excessive shock to the control unit by dropping or hitting it.
- Be careful to prevent condensation in the control unit due to rapid temperature changes and do not let water or rain get on it. If water is found in the control unit, dry it fully and then install it in the vehicle.
- Be careful not to let oil to get on the control unit connector.
- Avoid cleaning the control unit with volatile oil.
- Do not disassemble the control unit, and do not remove the upper and lower covers.

- When using a DMM, be careful not to let test probes get close to each other to prevent the power transistor in the control unit from damaging battery voltage because of short circuiting.
- When checking input and output signals of the control unit, use the specified check adapter.

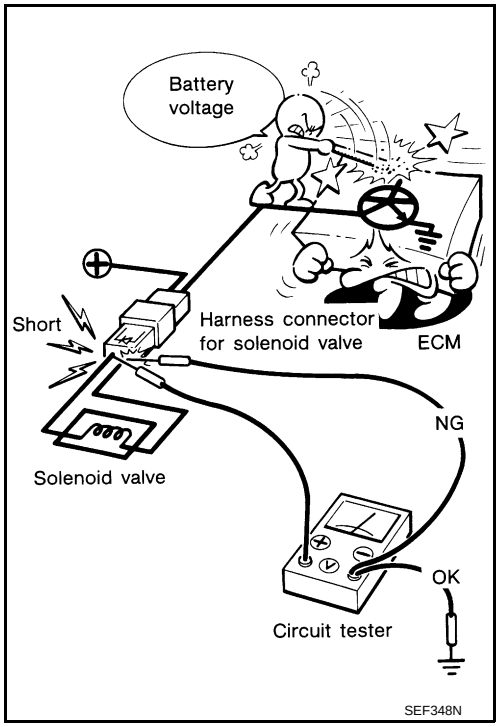

Intermittent Incident

INFOID:0000000003852795

DESCRIPTION

Sometimes the symptom is not present when the vehicle is brought in for service. If possible, re-create the conditions present at the time of the incident. Doing so may help avoid a No Trouble Found Diagnosis. The following section illustrates ways to simulate the conditions/environment under which the owner experiences an electrical incident.

The section is broken into the six following topics:

- Vehicle vibration
- Heat sensitive
- Freezing
- Water intrusion
- Electrical load
- Cold or hot start up

Get a thorough description of the incident from the customer. It is important for simulating the conditions of the problem.

VEHICLE VIBRATION

The problem may occur or become worse while driving on a rough road or when engine is vibrating (idle with A/C on). In such a case, you will want to check for a vibration related condition. Refer to the following illustration.

Connector & Harness

Determine which connectors and wiring harness would affect the electrical system you are inspecting. Gently shake each connector and harness while monitoring the system for the incident you are trying to duplicate. This test may indicate a loose or poor electrical connection.

Hint

Connectors can be exposed to moisture. It is possible to get a thin film of corrosion on the connector terminals. A visual inspection may not reveal this without disconnecting the connector. If the problem occurs intermittently, perhaps the problem is caused by corrosion. It is a good idea to disconnect, inspect and clean the terminals on related connectors in the system.

Sensor & Relay

Gently apply a slight vibration to sensors and relays in the system you are inspecting.
This test may indicate a loose or poorly mounted sensor or relay.

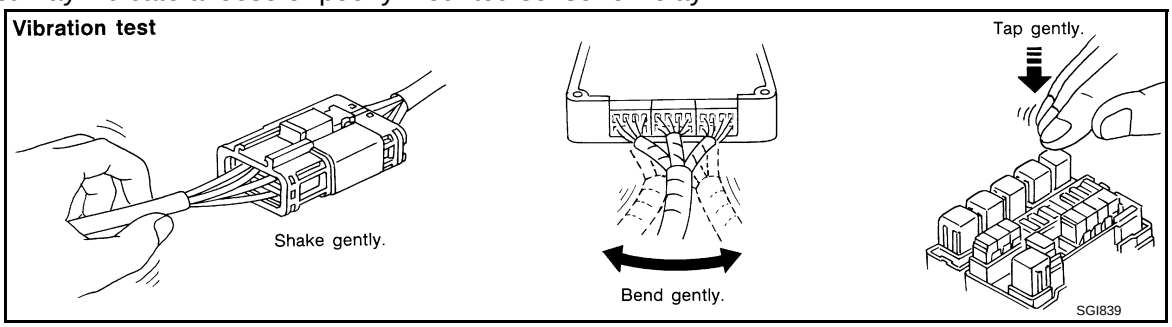

Engine Compartment

There are several reasons a vehicle or engine vibration could cause an electrical complaint. Some of the things to check for are:

- Connectors not fully seated.
- Wiring harness not long enough and is being stressed due to engine vibrations or rocking.
- Wires laying across brackets or moving components.
- Loose, dirty or corroded ground wires.
- Wires routed too close to hot components.

To inspect components under the hood, start by verifying the integrity of ground connections. (Refer to Ground Inspection described later.) First check that the system is properly grounded. Then check for loose connection by gently shaking the wiring or components as previously explained. Using the wiring diagrams inspect the wiring for continuity.

Behind the Instrument Panel

An improperly routed or improperly clamped harness can become pinched during accessory installation. Vehicle vibration can aggravate a harness which is routed along a bracket or near a screw.

Under Seating Areas

An unclamped or loose harness can cause wiring to be pinched by seat components (such as slide guides) during vehicle vibration. If the wiring runs under seating areas, inspect wire routing for possible damage or pinching.

HEAT SENSITIVE

- The customer's concern may occur during hot weather or after car has sat for a short time. In such cases you will want to check for a heat sensitive condition.
- To determine if an electrical component is heat sensitive, heat the component with a heat gun or equivalent.
  CAUTION:
  Do not heat components above 60°C (140°).
- If incident occurs while heating the unit, either replace or properly insulate the component.

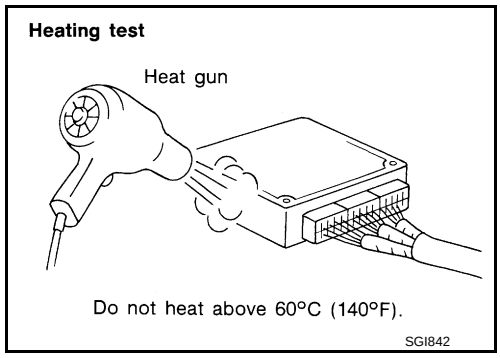

FREEZING

- The customer may indicate the incident goes away after the car warms up (winter time). The cause could be related to water freezing somewhere in the wiring/electrical system.
- There are two methods to check for this. The first is to arrange for the owner to leave his car overnight. Make sure it will get cold enough to demonstrate his complaint. Leave the car parked outside overnight. In the morning, do a quick and thorough diagnosis of those electrical components which could be affected.
- The second method is to put the suspect component into a freezer long enough for any water to freeze. Reinstall the part into the car and check for the reoccurrence of the incident. If it occurs, repair or replace the component.

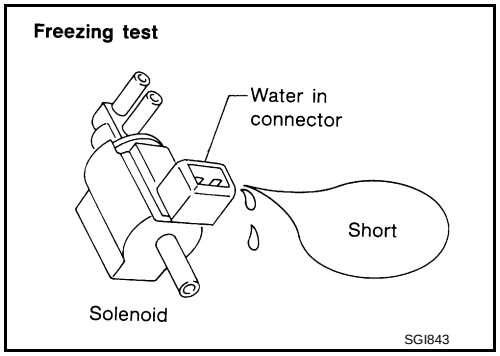

WATER INTRUSION

The incident may occur only during high humidity or in rainy/snowy weather. In such cases the incident could be caused by water intrusion on an electrical part. This can be simulated by soaking the car or running it through a car wash.

CAUTION:

Do not spray water directly on any electrical components.

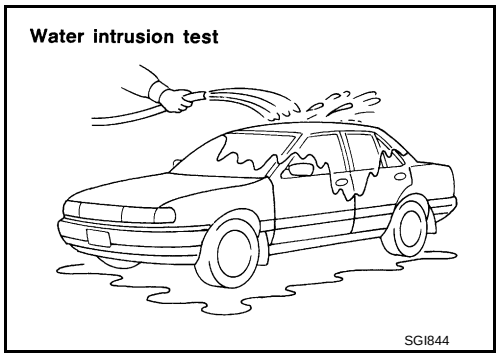

ELECTRICAL LOAD

The incident may be electrical load sensitive. Perform diagnosis with all accessories (including A/C, rear window defogger, radio, fog lamps) turned on.

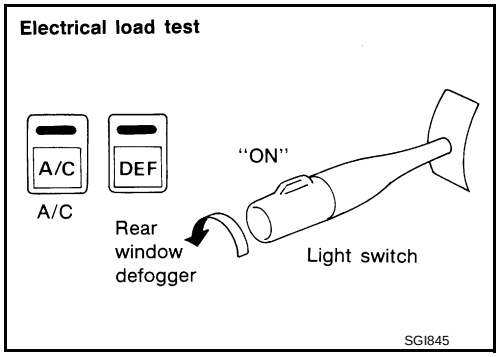

COLD OR HOT START UP

On some occasions an electrical incident may occur only when the car is started cold, or it may occur when the car is restarted hot shortly after being turned off. In these cases you may have to keep the car overnight to make a proper diagnosis.

Circuit Inspection

INFOID:0000000003852796

DESCRIPTION

- In general, testing electrical circuits is an easy task if it is approached in a logical and organized method. Before beginning it is important to have all available information on the system to be tested. Also, get a thorough understanding of system operation. Then you will be able to use the appropriate equipment and follow the correct test procedure.
- You may have to simulate vehicle vibrations while testing electrical components. Gently shake the wiring harness or electrical component to do this.

OPEN	A circuit is open when there is no continuity through a section of the circuit.	
SHORT	There are two types of shorts.	
	• SHORT CIRCUIT	When a circuit contacts another circuit and causes the normal resistance to change.
	• SHORT TO GROUND	When a circuit contacts a ground source and grounds the circuit.

TESTING FOR “OPENS” IN THE CIRCUIT

Before you begin to diagnose and test the system, you should rough sketch a schematic of the system. This will help you to logically walk through the diagnosis process. Drawing the sketch will also reinforce your working knowledge of the system.

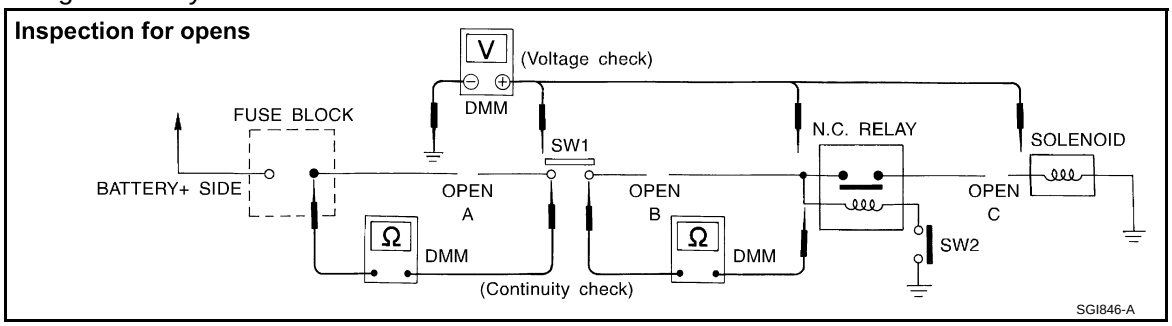

Continuity Check Method

The continuity check is used to find an open in the circuit. The digital multimeter (DMM) set on the resistance function will indicate an open circuit as over limit (no beep tone or no ohms symbol). Make sure to always start with the DMM at the highest resistance level.

To help in understanding the diagnosis of open circuits, please refer to the previous schematic.

- Disconnect the battery negative cable.
- Start at one end of the circuit and work your way to the other end. (At the fuse block in this example)
- Connect one probe of the DMM to the fuse block terminal on the load side.
- Connect the other probe to the fuse block (power) side of SW1. Little or no resistance will indicate that portion of the circuit has good continuity. If there were an open in the circuit, the DMM would indicate an over limit or infinite resistance condition. (point A)
- Connect the probes between SW1 and the relay. Little or no resistance will indicate that portion of the circuit has good continuity. If there were an open in the circuit, the DMM would indicate an over limit or infinite resistance condition. (point B)
- Connect the probes between the relay and the solenoid. Little or no resistance will indicate that portion of the circuit has good continuity. If there were an open in the circuit, the DMM would indicate an over limit or infinite resistance condition. (point C)

Any circuit can be diagnosed using the approach in the previous example.

Voltage Check Method

To help in understanding the diagnosis of open circuits please refer to the previous schematic.

In any powered circuit, an open can be found by methodically checking the system for the presence of voltage. This is done by switching the DMM to the voltage function.

- Connect one probe of the DMM to a known good ground.
- Begin probing at one end of the circuit and work your way to the other end.
- With SW1 open, probe at SW1 to check for voltage.
  voltage; open is further down the circuit than SW1.
  no voltage; open is between fuse block and SW1 (point A).
- Close SW1 and probe at relay.
  voltage; open is further down the circuit than the relay.
  no voltage; open is between SW1 and relay (point B).
- Close the relay and probe at the solenoid.
  voltage; open is further down the circuit than the solenoid.
  no voltage; open is between relay and solenoid (point C).

Any powered circuit can be diagnosed using the approach in the previous example.

TESTING FOR “SHORTS” IN THE CIRCUIT

To simplify the discussion of shorts in the system, please refer to the following schematic.

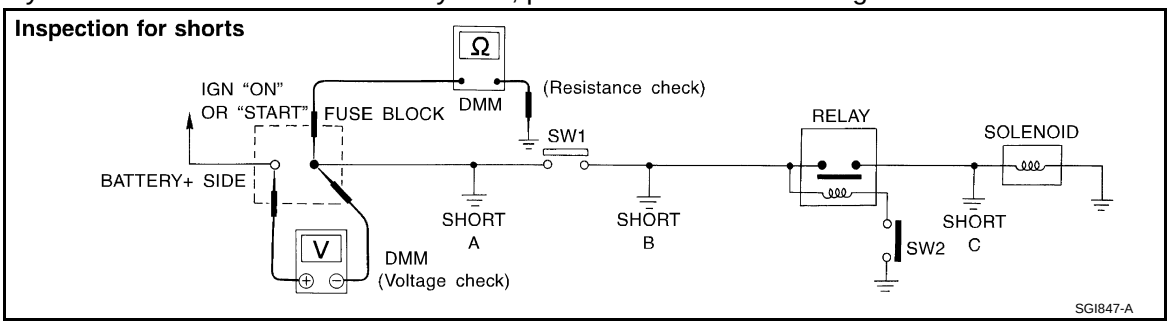

Resistance Check Method

- Disconnect the battery negative cable and remove the blown fuse.
- Disconnect all loads (SW1 open, relay disconnected and solenoid disconnected) powered through the fuse.
- Connect one probe of the DMM to the load side of the fuse terminal. Connect the other probe to a known good ground.
- With SW1 open, check for continuity.
  continuity; short is between fuse terminal and SW1 (point A).
  no continuity; short is further down the circuit than SW1.
- Close SW1 and disconnect the relay. Put probes at the load side of fuse terminal and a known good ground. Then, check for continuity.
  continuity; short is between SW1 and the relay (point B).
  no continuity; short is further down the circuit than the relay.
- Close SW1 and jump the relay contacts with jumper wire. Put probes at the load side of fuse terminal and a known good ground. Then, check for continuity.
  continuity; short is between relay and solenoid (point C).
  no continuity; check solenoid, retrace steps.

Voltage Check Method

- Remove the blown fuse and disconnect all loads (i.e. SW1 open, relay disconnected and solenoid disconnected) powered through the fuse.
- Turn the ignition key to the ON or START position. Verify battery voltage at the battery + side of the fuse terminal (one lead on the battery + terminal side of the fuse block and one lead on a known good ground).
- With SW1 open and the DMM leads across both fuse terminals, check for voltage.
  voltage; short is between fuse block and SW1 (point A).
  no voltage; short is further down the circuit than SW1.
- With SW1 closed, relay and solenoid disconnected and the DMM leads across both fuse terminals, check for voltage.
  voltage; short is between SW1 and the relay (point B).
  no voltage; short is further down the circuit than the relay.
- With SW1 closed, relay contacts jumped with fused jumper wire check for voltage.
  voltage; short is down the circuit of the relay or between the relay and the disconnected solenoid (point C).
  no voltage; retrace steps and check power to fuse block.

GROUND INSPECTION

- Ground connections are very important to the proper operation of electrical and electronic circuits. Ground connections are often exposed to moisture, dirt and other corrosive elements. The corrosion (rust) can become an unwanted resistance. This unwanted resistance can change the way a circuit works.
- Electronically controlled circuits are very sensitive to proper grounding. A loose or corroded ground can drastically affect an electronically controlled circuit. A poor or corroded ground can easily affect the circuit. Even when the ground connection looks clean, there can be a thin film of rust on the surface.
- When inspecting a ground connection follow these rules:
- Remove the ground bolt or screw.
- Inspect all mating surfaces for tarnish, dirt, rust, etc.
- Clean as required to assure good contact.
- Reinstall bolt or screw securely.
- Inspect for "add-on" accessories which may be interfering with the ground circuit.
- If several wires are crimped into one ground eyelet terminal, check for proper crimps. Make sure all of the wires are clean, securely fastened and providing a good ground path. If multiple wires are cased in one eyelet make sure no ground wires have excess wire insulation.

- For detailed ground distribution information, refer to “Ground Distribution” in PG section.

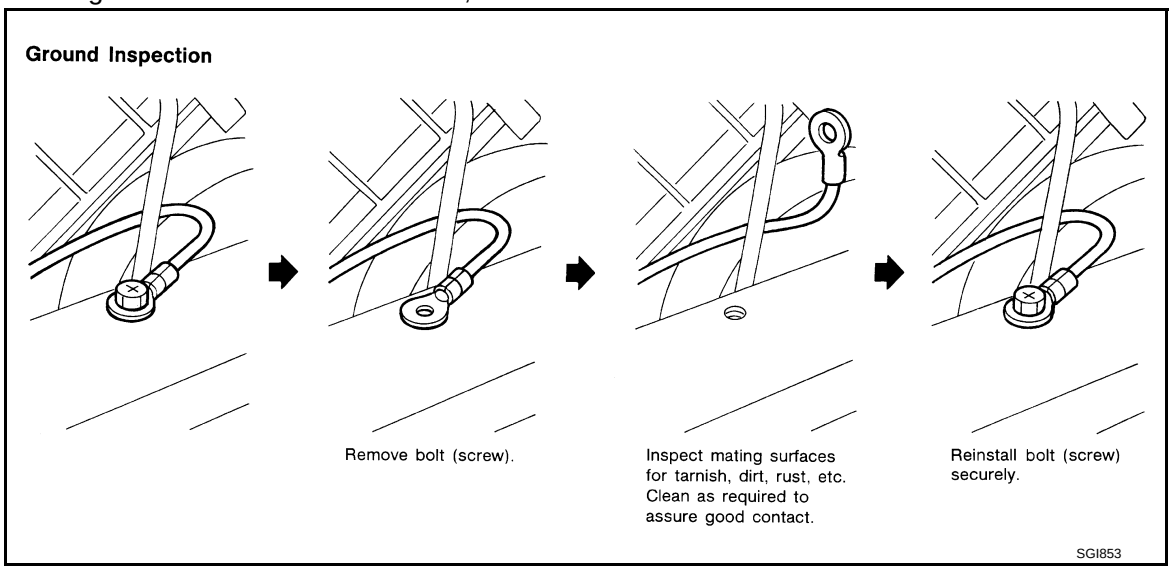

VOLTAGE DROP TESTS

- Voltage drop tests are often used to find components or circuits which have excessive resistance. A voltage drop in a circuit is caused by a resistance when the circuit is in operation.
- Check the wire in the illustration. When measuring resistance with DMM, contact by a single strand of wire will give reading of 0 ohms. This would indicate a good circuit. When the circuit operates, this single strand of wire is not able to carry the current. The single strand will have a high resistance to the current. This will be picked up as a slight voltage drop.
- Unwanted resistance can be caused by many situations as follows:
- Undersized wiring (single strand example)
- Corrosion on switch contacts
- Loose wire connections or splices.
- If repairs are needed always use wire that is of the same or larger gauge.

Measuring Voltage Drop — Accumulated Method

- Connect the DMM across the connector or part of the circuit you want to check. The positive lead of the DMM should be closer to power and the negative lead closer to ground.
- Operate the circuit.
- The DMM will indicate how many volts are being used to “push” current through that part of the circuit.

Note in the illustration that there is an excessive 4.1 volt drop between the battery and the bulb.

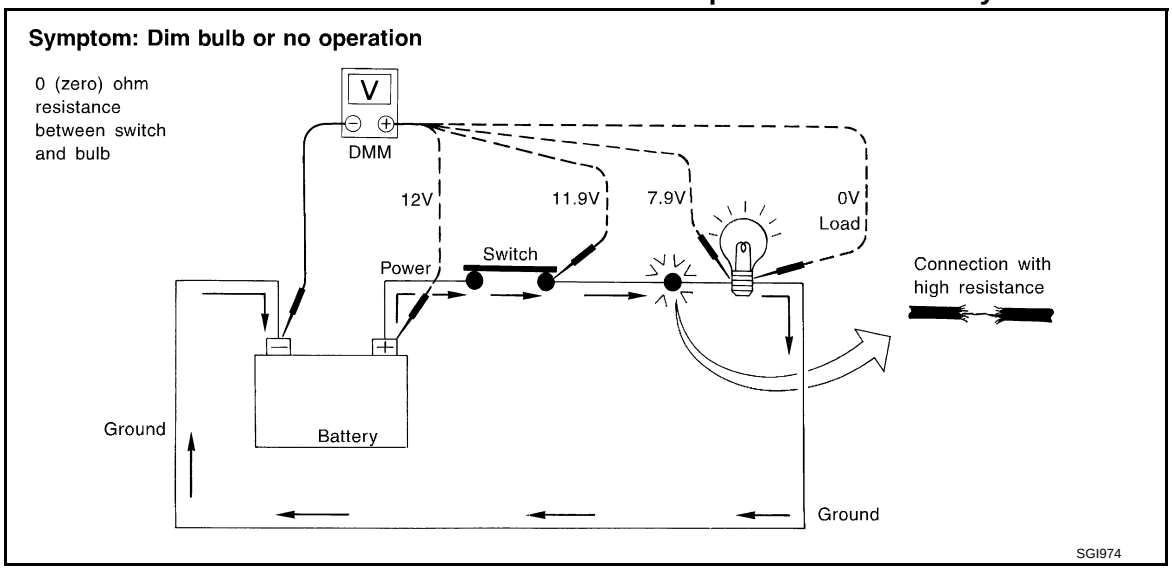

Measuring Voltage Drop — Steb-by-Step

- The step-by-step method is most useful for isolating excessive drops in low voltage systems (such as those in “Computer Controlled Systems”).
- Circuits in the “Computer Controlled System” operate on very low amperage.

- The (Computer Controlled) system operations can be adversely affected by any variation in resistance in the system. Such resistance variation may be caused by poor connection, improper installation, improper wire gauge or corrosion.
- The step by step voltage drop test can identify a component or wire with too much resistance.

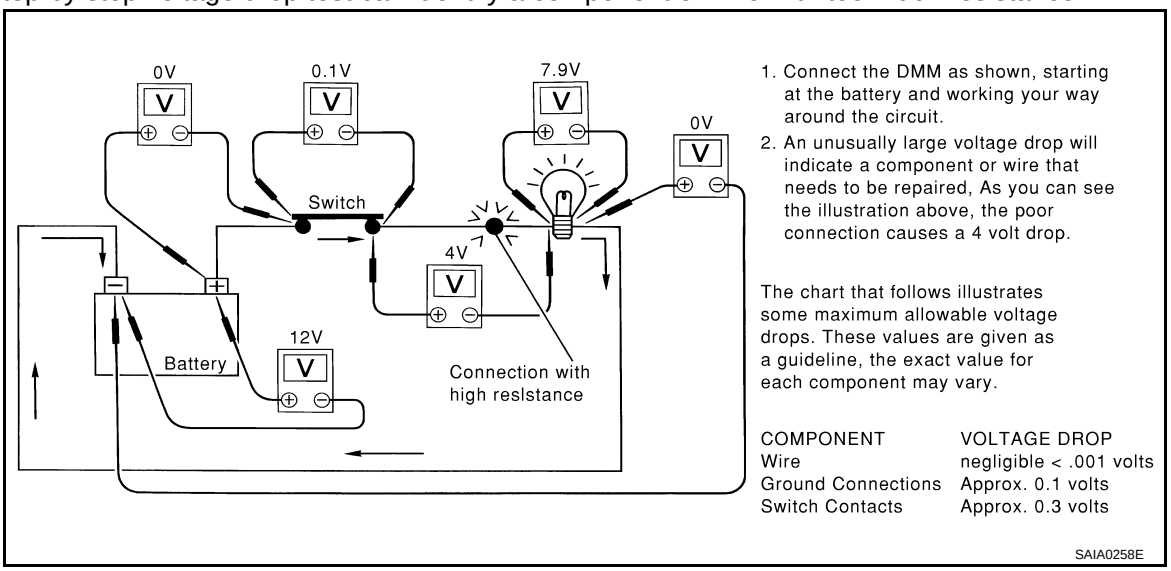

CONTROL UNIT CIRCUIT TEST

System Description

- When the switch is ON, the control unit lights up the lamp.

CASE 1

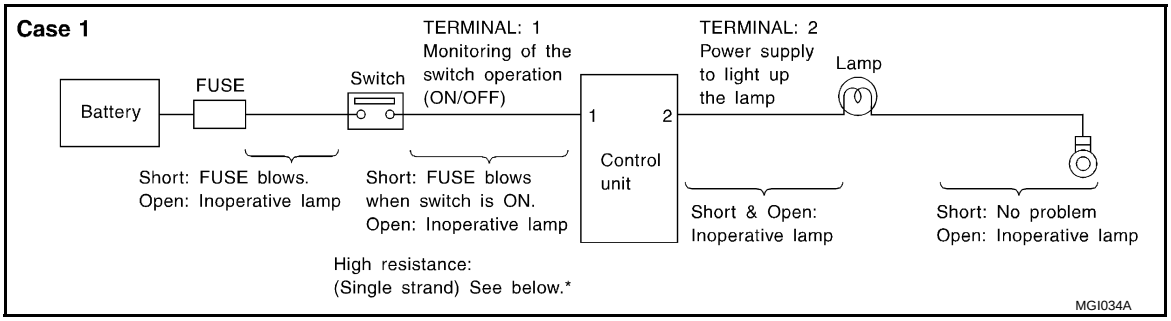

INPUT-OUTPUT VOLTAGE CHART

Terminal No.		Description		Condition	Value (Approx.)	In case of high resistance such as single strand (V) *
+	–	Signal name	Input/ Output			
1	Body ground	Switch	Input	Switch ON	Battery voltage	Lower than battery voltage Approx. 8 (Example)
				Switch OFF	0 V	Approx. 0
2	Body ground	Lamp	Output	Switch ON	Battery voltage	Approx. 0 (Inoperative lamp)
				Switch OFF	0 V	Approx. 0

- The voltage value is based on the body ground.
- *: If high resistance exists in the switch side circuit (caused by a single strand), terminal 1 does not detect battery voltage. Control unit does not detect the switch is ON even if the switch does not turn ON. Therefore, the control unit does not supply power to light up the lamp.

CASE 2

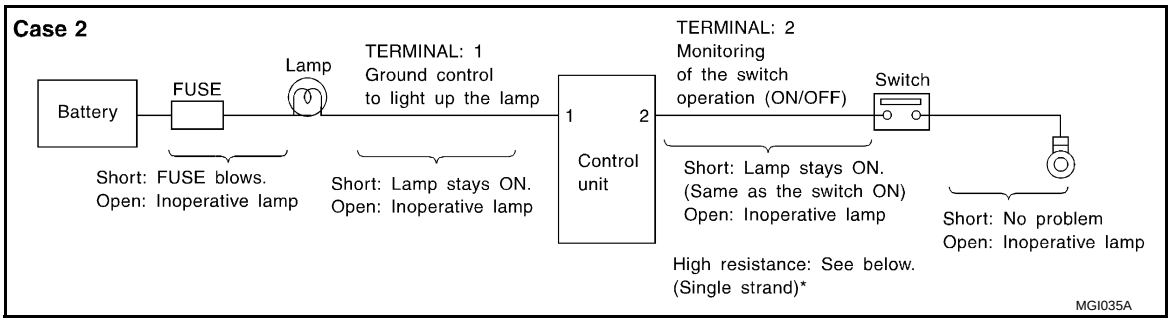

INPUT-OUTPUT VOLTAGE CHART

Terminal No.		Description		Condition	Value (Approx.)	In case of high resistance such as single strand (V) *
+	–	Signal name	Input/ Output			
1	Body ground	Lamp	Output	Switch ON	0V	Battery voltage (Inoperative lamp)
				Switch OFF	Battery voltage	Battery voltage
2	Body ground	Switch	Input	Switch ON	0 V	Higher than 0 Approx. 4 (Example)
				Switch OFF	5 V	Approx. 5

- The voltage value is based on the body ground.
- *: If high resistance exists in the switch side circuit (caused by a single strand), terminal 2 does not detect approx. 0V. Control unit does not detect the switch is ON even if the switch does not turn ON. Therefore, the control unit does not control ground to light up the lamp.

CONSULT-III/GST CHECKING SYSTEM

Description

INFOID:0000000003852797

- When CONSULT-III/GST is connected with a data link connector (A) equipped on the vehicle side, it will communicate with the control unit equipped in the vehicle and then enable various kinds of diagnostic tests.

  1 : Instrument driver lower panel

- Refer to “CONSULT-III Software Operation Manual” for more information.

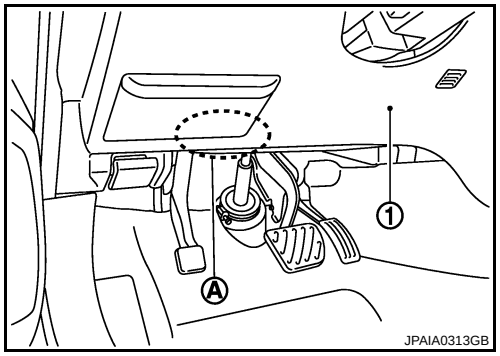

CONSULT-III Function and System Application*1

INFOID:0000000003852798

Diagnostic test mode	Function	ENGINE	TRANSMISSION	AIR BAG	METER/M&A	BCM	AUTO DRIVE POS.	ABS	ABS (Including VDC)	IPDM E/R	HEAD LAMP LEVELIZER	MULTI AV	HVAC
Work Support	This mode enables a technician to adjust some devices faster and more accurately.	x	x	-	-	x	x	-	x	-	x	-	x
Self-Diagnostic Results	Retrieve DTC from ECU and display diagnostic items.	x	x	x	x	x	x	x	x	x	x	x	x
Data Monitor	Monitor the input/output signal of the control unit in real time.	x	x	-	x	x	x	x	x	x	x	x	x
CAN Diagnosis	This mode displays a network diagnosis result about CAN by a diagram.	x	x	-	x	x	x	x	x	x	-	x	x
CAN Diagnosis Support Monitor	It monitors the status of CAN communication.	x	x	-	x	x	x	x	x	x	-	x	-
Active Test	Send the drive signal from CONSULT-III to the actuator. The operation check can be performed.	x	-	-	-	x	x	x	x	x	x	-	x
DTC & SRT confirmation	The status of system monitoring tests and the self-diagnosis status/result can be confirmed.	x	-	-	-	-	-	-	-	-	-	-	-
ECU Identification	Display the ECU identification number (part number etc.) of the selected system.	x	x	-	-	x	x	x	x	x	x	x	x
Function Test	This mode can show results of self-diagnosis of ECU with either "OK" or "NG". For engine, more practical tests regarding sensors/switches and/or actuators are available.	x	x	x	-	-	-	x	x	-	-	-	-
Configuration	Function to READ/WRITE vehicle configuration	-	-	-	-	x	-	-	-	-	x	-	-
Special Function	Other results or histories, etc. that are recorded in ECU are displayed.	-	x	x	x	-	-	-	-	-	-	-	-

x: Applicable

*1: If GST application is equipped, functions in accordance with SAE J1979 and ISO 15031-5 can be used.

CONSULT-III/GST Data Link Connector (DLC) Circuit

INFOID:0000000003852799

INSPECTION PROCEDURE

If the CONSULT-III/GST cannot diagnose the system properly, check the following items.

Symptom	Check item
CONSULT-III/GST cannot access any system.	• CONSULT-III/GST DLC power supply circuit (Terminal 8 and 16) and ground circuit (Terminal 4 and 5)
CONSULT-III cannot access individual system. (Other systems can be accessed.)	• Power supply and ground circuit for the control unit of the system (For detailed circuit, refer to wiring diagram for each system.) • Open or short circuit between the system and CONSULT-III DLC (For detailed circuit, refer to wiring diagram for each system.) • Open or short circuit CAN communication line. Refer to LAN-14, "Trouble Diagnosis Flow Chart".

NOTE:
The DDL1 and DDL2 circuits from DLC pins 12, 13, 14 and 15 may be connected to more than one system. A short in a DDL circuit connected to a control unit in one system may affect CONSULT-III access to other systems.
If the GST cannot operate properly, check the circuit based on the information of SAE J1962 and ISO 15031-3.

Wiring Diagram - CONSULT-III/GST CHECKING SYSTEM -

INFOID:0000000003852800

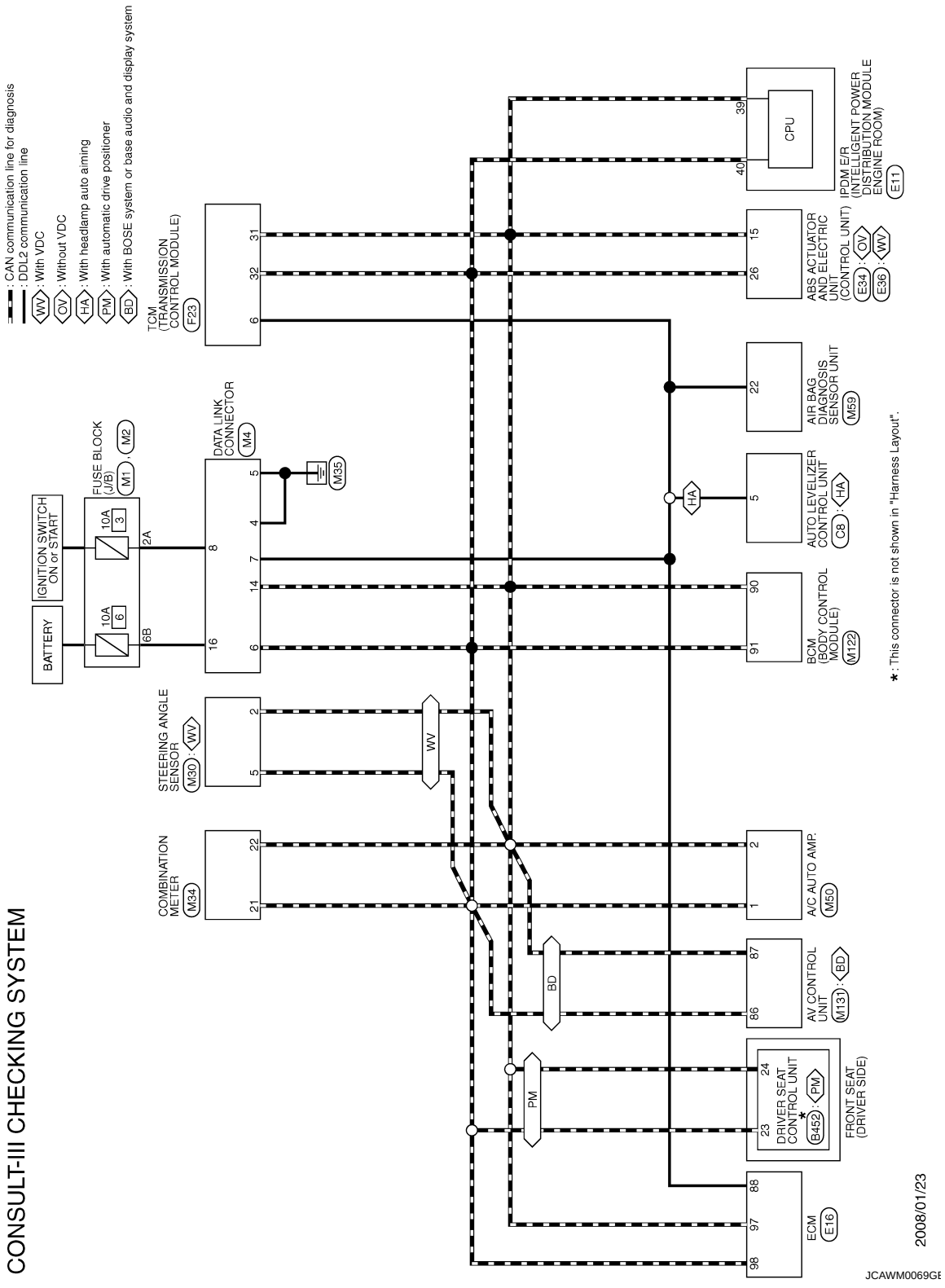

CONSULT-III CHECKING SYSTEM

Connector No.	B452
Connector Name	DRIVER SEAT CONTROL UNIT
Connector Type	TH32FW

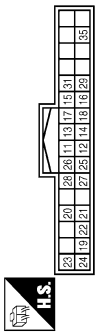

Terminal No.	Color of Wire	Signal Name [Specification]
23	P	CAN-H
24	P/L	CAN-L

Connector No.	C8
Connector Name	AUTO LEVELIZER CONTROL UNIT
Connector Type	AEX08FB

Terminal No.	Color of Wire	Signal Name [Specification]
5	O	–

Connector No.	E11
Connector Name	IPDM E/R (INTELLIGENT POWER DISTRIBUTION MODULE ENGINE ROOM)
Connector Type	TH08FW-NH

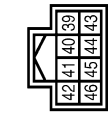

Terminal No.	Color of Wire	Signal Name [Specification]
39	P	–
40	L	–

Connector No.	E16
Connector Name	ECM
Connector Type	RH24FB-RZ8-L-LH

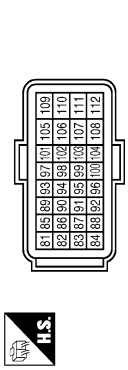

Terminal No.	Color of Wire	Signal Name [Specification]
88	O	KLINE
97	P	VEHCAN-L
98	L	VEHCAN-H

Connector No.	E34
Connector Name	ABS ACTUATOR AND ELECTRIC UNIT (CONTROL UNIT) (WITHOUT VDC)
Connector Type	BAA22FB-AHZ4-RH

Terminal No.	Color of Wire	Signal Name [Specification]
15	P	CAN(-)
26	L	CAN(+)

Connector No.	E36
Connector Name	ABS ACTUATOR AND ELECTRIC UNIT (CONTROL UNIT) (WITH VDC)
Connector Type	BAA22FB-AHZ4-RH

Terminal No.	Color of Wire	Signal Name [Specification]
15	P	CAN-L(YRS)
26	L	CAN-H(YRS)

Connector No.	F23
Connector Name	TCM (TRANSMISSION CONTROL MODULE)
Connector Type	RH40FB-RZ8-L-RH

Terminal No.	Color of Wire	Signal Name [Specification]
6	O	K-LINE
31	P	CAN-L
32	L	CAN-H

Connector No.	M1
Connector Name	FUSE BLOCK (J/B)
Connector Type	NS08FW-M2

Terminal No.	Color of Wire	Signal Name [Specification]
2A	G/O	–

JCAWM0070GE

CONSULT-III CHECKING SYSTEM

Connector No.	M2
Connector Name	FUSE BLOCK (J/B)
Connector Type	NS10FW-CS

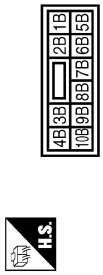

Terminal No.	Color of Wire	Signal Name [Specification]
6B	Y/R	–

Connector No.	M4
Connector Name	DATA LINK CONNECTOR
Connector Type	BD16FW

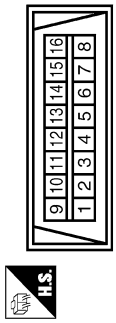

Terminal No.	Color of Wire	Signal Name [Specification]
4	B	–
5	B	–
6	L	–
7	O	–
8	G/O	–
14	P	–
16	Y/R	–

Connector No.	M30
Connector Name	STEERING ANGLE SENSOR
Connector Type	TH08FW-NH

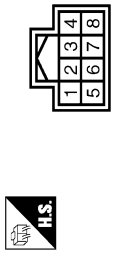

Terminal No.	Color of Wire	Signal Name [Specification]
2	P	–
5	L	–

Connector No.	M34
Connector Name	COMBINATION METER
Connector Type	TH40FW-NH

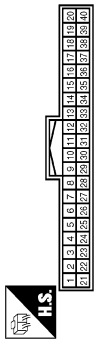

Terminal No.	Color of Wire	Signal Name [Specification]
21	L	CAN-H
22	P	CAN-L

Connector No.	M50
Connector Name	A/C AUTO AMP.
Connector Type	SAB40FW

Terminal No.	Color of Wire	Signal Name [Specification]
1	L	CAN-H
2	P	CAN-L

Connector No.	M59
Connector Name	AIR BAG DIAGNOSIS SENSOR UNIT
Connector Type	TK20FY-EX-SC

Terminal No.	Color of Wire	Signal Name [Specification]
22	O	K-LINE

Connector No.	M122
Connector Name	BCM (BODY CONTROL MODULE)
Connector Type	TH40FB-NH

Terminal No.	Color of Wire	Signal Name [Specification]
90	P	CAN-L
91	L	CAN-H

Connector No.	M131
Connector Name	AV CONTROL UNIT
Connector Type	TH32FW-NH

Terminal No.	Color of Wire	Signal Name [Specification]
86	L	CAN-H
87	P	CAN-L

JCAWM0071GE

INSPECTION AND ADJUSTMENT

ADDITIONAL SERVICE WHEN REMOVING BATTERY NEGATIVE TERMINAL

ADDITIONAL SERVICE WHEN REMOVING BATTERY NEGATIVE TERMINAL : Re-

quired Procedure After Battery Disconnection

INFOID:0000000003852904

SYSTEM	ITEM			REFERENCE
Automatic temperature control	Temperature setting trimmer	WITHOUT 7 INCH DISPLAY		HAC-10, "Temperature Setting Trimmer"
		WITH 7 INCH DISPLAY	WITHOUT INTELLIGENT AIR CONITIONER SYSTEM	HAC-110, "WITHOUT INTELLIGENT AIR CONDITIONER SYSTEM : Temperature Setting Trimmer"
			WITH INTELLIGENT AIR CONDITIONER SYSTEM	HAC-114, "WITH INTELLIGENT AIR CONDITIONER SYSTEM : Temperature Setting Trimmer"
	Foot position setting trimmer	WITHOUT 7 INCH DISPLAY		HAC-10, "Foot Position Setting Trimmer"
		WITH 7 INCH DISPLAY	WITHOUT INTELLIGENT AIR CONITIONER SYSTEM	HAC-110, "WITHOUT INTELLIGENT AIR CONDITIONER SYSTEM : Foot Position Setting Trimmer"
			WITH INTELLIGENT AIR CONDITIONER SYSTEM	HAC-114, "WITH INTELLIGENT AIR CONDITIONER SYSTEM : Foot Position Setting Trimmer"
	Inlet port memory function*			—
	Inlet port Memory function (FRE)	WITHOUT 7 INCH DISPLAY		HAC-11, "Inlet Port Memory Function (FRE)"
		WITH 7 INCH DISPLAY	WITHOUT INTELLIGENT AIR CONITIONER SYSTEM	HAC-111, "WITHOUT INTELLIGENT AIR CONDITIONER SYSTEM : Inlet Port Memory Function (FRE)"
			WITH INTELLIGENT AIR CONDITIONER SYSTEM	HAC-115, "WITH INTELLIGENT AIR CONDITIONER SYSTEM : Inlet Port Memory Function (FRE)"
	Inlet port Memory Function (REC)	WITHOUT 7 INCH DISPLAY		HAC-11, "Inlet Port Memory Function (REC)"
		WITH 7 INCH DISPLAY	WITHOUT INTELLIGENT AIR CONITIONER SYSTEM	HAC-111, "WITHOUT INTELLIGENT AIR CONDITIONER SYSTEM : Inlet Port Memory Function (REC)"
			WITH INTELLIGENT AIR CONDITIONER SYSTEM	HAC-115, "WITH INTELLIGENT AIR CONDITIONER SYSTEM : Inlet Port Memory Function (REC)"
	Gas Sensor Sensitivity Adjustment Function	WITHOUT 7 INCH DISPLAY*		—
		WITH 7 INCH DISPLAY	WITHOUT INTELLIGENT AIR CONITIONER SYSTEM*	—
			WITH INTELLIGENT AIR CONDITIONER SYSTEM	HAC-116, "WITH INTELLIGENT AIR CONDITIONER SYSTEM : Gas Sensor Sensitivity Adjustment Function (With Intelligent Air Conditioner System)"
	Auto Intake Switch Interlocking Movement Change*			—
	Clean Switch Interlocking Movement Change	WITHOUT 7 INCH DISPLAY*		—
		WITH 7 INCH DISPLAY	WITHOUT INTELLIGENT AIR CONITIONER SYSTEM*	—
			WITH INTELLIGENT AIR CONDITIONER SYSTEM	HAC-116, "WITH INTELLIGENT AIR CONDITIONER SYSTEM : Clean Switch Interlocking Movement Change Function (With Intelligent Air Conditioner System)"
Automatic drive positioner	Automatic drive positioner system			ADP-7, "ADDITIONAL SERVICE WHEN REMOVING BATTERY NEGATIVE TERMINAL : Description"

SYSTEM	ITEM		REFERENCE
Power window control	Power window control system		PWC-5, "ADDITIONAL SERVICE WHEN REMOVING BATTERY NEGATIVE TERMINAL : Description"
Sunroof system	Sunroof system*		—
Sunshade system	Sunshade system*		—
Rear view monitor	Rear view monitor possible route line center position adjustment	DISPLAY AND AUDIO SYSTEM	AV-47, "ADDITIONAL SERVICE WHEN REMOVING BATTERY NEGATIVE TERMINAL : Description"
		BOSE AUDIO WITHOUT NAVIGATION	AV-187, "ADDITIONAL SERVICE WHEN REMOVING BATTERY NEGATIVE TERMINAL : Description"
		BOSE AUDIO WITH NAVIGATION	AV-400, "ADDITIONAL SERVICE WHEN REMOVING BATTERY NEGATIVE TERMINAL : Description"
Around view monitor	Predicted conurse line center position adjustment*		—
Automatic back door system	Automatic back door system*		—
Engine oil level read	Engine oil level read*		—

*: Not equipped